NO. 52 NOTES FROM THE SHOP $2.50

Woodsmith®

PROJECTS: KNIFE RACK
ROUTED CHEESE BOARD
SALT AND PEPPER SHAKERS
TECHNIQUES: SHARPENING SPADE BITS, TURNING WITH A ROUTER

Woodsmith®

Number 52 **August, 1987**

Editor
Donald B. Peschke

Design Director
Ted Kralicek

Assistant Editors
Steve Krohmer
Douglas L. Hicks
Douglas M. Lidster

Designer
Ken Munkel

Technical Illustrator
David Kreyling

Subscription Manager
Sandy J. Baum

Subscription Assistants
Christel Miner
Vicky Robinson
Jackie Stroud
Pat Koob

Computer Operations
Ken Miner

Administrative Assistants
Cheryl Scott
Kate Bauma

Builiding Maintenance
Archie Krause

WOODSMITH (ISSN 0164-4114) is published bimonthly (February, April, June, August, October, December) by Woodsmith Publishing Co., 2200 Grand Ave., Des Moines, Iowa 50312.

WOODSMITH is a registered trademark of the Woodsmith Publishing Co.
©Copyright 1987 by Woodsmith Publishing Co. All Rights Reserved.

Subscriptions: One year (6 issues) $10, Two years (12 issues) $18. Single copy price, $2.50 (Canada and Foreign: add $2 per year.)
Change Of Address: Please be sure to include both your old and new address.
Second class postage paid at Des Moines, Iowa.
Postmaster: Send change of address notice, Form 3579, to Woodsmith Publishing Co., 2200 Grand Ave., Des Moines, Iowa 50312.

BACK ISSUES

All back issues of *Woodsmith* are still available. Send for a free booklet describing the contents and prices of all back issues.

SAMPLE COPIES

If you have a friend who would like to see a copy of **Woodsmith**, just send the name and address, and we'll send a sample (at no cost).

Sawdust

ABOUT THIS ISSUE. Last spring we were talking about putting together an issue of projects that would make good Christmas presents. As we were going down the list of ideas, one project immediately grabbed my attention: a kaleidoscope.

The ones I remember as a child displayed a pattern of brightly colored little objects sealed in one end. But there's another classic style that displays an array of images of the sights around you.

This type has a lens at the end. (Some styles use a marble.) As you look through it, it's like looking through a telescope, except what you see is a collage of triangular images — each one a miniature view of your surroundings. It's quite a delight to every eye that looks through it (no matter what the age).

It's also a project that's a bit of a challenge to build. We had to build a special router jig to make the "turned" ends on the kaleidoscope's body.

In fact, every project in this issue involves the use of a special jig. That's what made all of these projects a lot more interesting than they might appear.

One of the biggest challenges in woodworking is figuring out how to build something. And that often involves a special jig or technique. The result of this effort is more than immediate results. It usually means an expansion in the types of projects that can be built.

When we built the router turning jig to make the kaleidoscope, we suddenly had a new tool at our disposal. One that sparked a lot of interest and got us thinking about all sorts of applications. (For example, the salt and pepper shakers in this issue.)

The same goes for the routing jig used on the cheese board. This same type of box jig could be used to do some interesting inlay work.

I guess this is all another way of saying that figuring out the process is sometimes more interesting (and more of a challenge) than actually building the project. So, for the projects in this Christmas gift issue there are two rewards: The joy of figuring out how to build the projects, and the joy of giving them away.

WOODSMITH FINE TOOLS. Last year I met John Economaki of Bridge City Tool Works. He's a young guy from Portland with two characteristics I admire: a keen eye for quality, and good ideas about making top- quality woodworking tools.

The tools he makes are unforgettable — solid brass squares with rosewood handles. You may have seen them at a woodworking show, or in a catalog (Garrett Wade and Woodcraft Supply carry them). *Fine Woodworking* magazine also did an article about John and the way he manufactures his squares. (*Fine Woodworking* No. 59, the July/August, 1986 issue.)

Within an hour of our first meeting, we shook hands on a project that I've been wanting to do for years now. We are introducing the first *Woodsmith Fine Tool*.

Of course, we are not tool manufacturers. But we do appreciate well-made tools. And we were anxious to get involved in the production of a line of quality tools.

John agreed to produce a special Master Try Square exclusively for *Woodsmith Fine Tools*. This square has a 6" blade, which is right in between the two sizes he currently markets.

The actual production process is an interesting one. John demands perfection, or as close as you can get within reason. All of his squares are guaranteed to be less than .002" off square over the length of the blade, both inside and outside. (On a 6" square that translates to approximately one minute of arc, or 1/60th of one degree.)

To get this kind of accuracy, the Master Try Square goes through 40 manufacturing steps to assemble 26 parts, which are checked at 12 quality control points.

Yet, if I have a reservation about this square, it's that it's almost too good. We didn't want to produce a "ceremonial" square only for collectors.

Instead, we wanted a square that could be used under all conditions. The problem is that there's a reluctance to use a high-quality, expensive tool for everyday work. What if it gets damaged?

The solution, we decided, was to keep the high quality and add this guarantee: If the *Woodsmith* Master Try Square is ever damaged and you feel it is no longer square (even if it's dropped or run over by a truck), just return it to us (with a check for $5.00) and we will recalibrate it, resquare it, or replace it (at our option) for as long as you own the tool.

All in all, it is very gratifying to be able to present a tool of this quality as the first with our name on it.

If you'd like to order the *Woodsmith* Master Try Square, use the order form bound in the center of this issue. (If that form is missing, send your name and address, and payment of $42.50 to *Woodsmith Fine Tools*, P.O. Box 10350, Des Moines, IA 50306.)

There's one note I'd like to add. We were only able to make a limited supply in time for delivery for Christmas this year. If you want one for Christmas, order soon.

NEXT ISSUE. The next issue of *Woodsmith* (No. 53) will be mailed during the first week of December, 1987.

Tips & Techniques

ROUTER TOOL

To tighten the depth adjustment on my router, there's a large wing nut. I make a habit of only tightening it by hand, but there are times when I can't get it loose. Using a pair of pliers to loosen a wing nut or knob on a tool never sat well with me.

To solve the problem I made a simple little tool out of an 8"-long scrap of oak. In one end I routed a stopped slot that would just fit over the wing nut on the router. With the extra leverage provided, it's easy to loosen the wing nut.

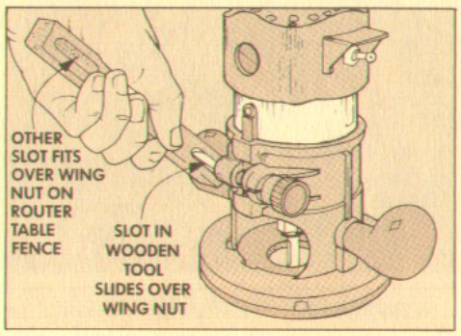

It worked so well that I decided to make it a multi-purpose tool by adding another slot to the other end that would just fit the wing nuts on my router table fence. It works great for locking the fence down tight and then loosening it for readjustment.

Finally, I added a string to my new tool to hang it up, and so it doesn't get tossed out with scrap pieces.

Phil Jacobs
Ann Arbor, Michigan

CUTTING THIN STRIPS

I recently had to cut some very narrow, uniform strips for moldings. Cutting them between the rip fence and blade of my table saw seemed dangerous — the narrow strips could easily get caught up in the saw blade and kick back, or they could get chewed up by the blade.

The best alternative is to cut the narrow strips off the waste side of the blade so they would fall away safely from the blade after being cut. This isn't a problem when cutting one strip, but can be more difficult if you want to cut off more than one strip exactly the same size.

To cut more than one strip, the rip fence has to be moved slightly between each cut. And to keep the strips perfectly uniform, the amount of movement has to be the same each time. Using a ruler to measure can be time-consuming and inaccurate — especially on very narrow pieces that have to be the exact same size.

To solve the problem, I built a simple jig out of a couple pieces of scrap and a hinge (see drawing below).

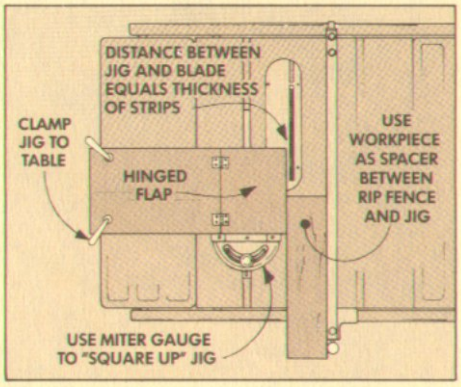

To use the jig, it's clamped to the table saw so the right edge of the jig is parallel to the fence. (I used the miter gauge to help square the jig to the fence.) Clamp the jig down so the distance between the outside of the saw blade and the jig flap equals the thickness of the piece to be cut off.

Next, put the workpiece up against the jig, move the rip fence over tight against the work, and lock down the rip fence. (Note: You must have a workpiece that is uniform in width before you start. This technique won't work if the workpiece is tapered.)

Now flip the jig flap up out of the way and cut a strip. (Never cut with the jig flap down.)

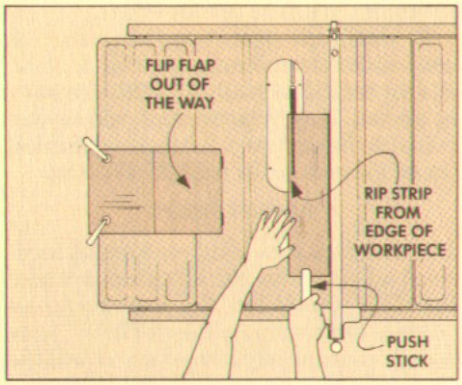

To cut more strips the exact same thickness, turn off the saw, and flip the jig flap back down. Then put the workpiece against the flap, move the fence over tight against the workpiece, and continue the same cutting procedure as before.

George P. Seifert
Shoreview, Minnesota

CIRCLE JIG, AN ADDENDUM

I saw the circle cutting jig in *Woodsmith* No. 51 and have a similar one for my band saw. Occasionally I want to cut a circle out of a piece of wood on the jig, but don't want to drill a hole (for the pivot point) in my finished circle blank.

To do this, fasten the workpiece to a similar-sized piece of plywood with double-faced carpet tape. Then drill the pivot point only into the plywood and mount the taped-together blanks onto the pivot nail on the cutting jig. After cutting both the plywood and the workpiece into a circle, pull them apart and the finished blank won't have a hole.

Thomas H. Rose
Los Angeles, California

SANDING SCROLL CUTS

Recently I was working on a panel headboard for a queen- size bed and had to make several scroll (curved) cuts with a hand-held sabre saw. The sabre saw left a cut in my large workpiece that was neither square nor smooth.

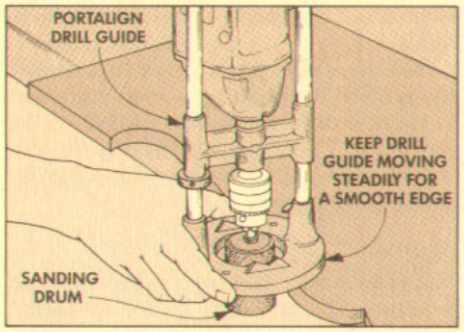

If the workpiece had been smaller, I would have made the cut slightly oversize with my band saw and then cleaned it up to the line with a drum sander on the drill press. But this piece was too big to try to get up on the drill press.

The solution was to mount a sanding drum in a Portalign Drill Guide (I have the Sears model). The drill guide is controlled like a router, and it produces as smooth and square a surface as if it had been done on a drill press.

Hugh E. White
Pennington, New Jersey

SEND IN YOUR IDEAS

If you'd like to share a woodworking tip with other readers of *Woodsmith*, send your idea to: *Woodsmith*, Tips & Techniques, 2200 Grand Ave., Des Moines, Iowa 50312.

We pay a minimum of $10 for tips, and $15 or more for special techniques (that are accepted for publication). Please give a complete explanation of your idea. If a sketch is needed, send it along; we'll draw a new one.

Kaleidoscope

AN ENTERTAINING VIEW OF THE WORLD

When I was a little kid, Santa Claus stuffed my stocking with a cardboard tube that made an intriguing rattle as my hands trembled with excitement. When I looked inside to see what was making the noise, I was amazed to find thousands of pebbles floating in a vast array of colorful geometric shapes. I was convinced it was magic.

Now that I'm a somewhat older kid, I've had a chance to make another kind of kaleidoscope. This one doesn't rely on pebbles for effects. Instead, it alters the view of the real world. It's still amazing, but I realize it's not magic. It's all done with mirrors.

The inside of the body of a kaleidoscope is lined with three slender mirrors fastened edge to edge to form a triangle. When looking through this mirror tunnel, the reflections of objects are reflected again and again by the mirrors. In my childhood kaleidoscope, these multiple reflections are what transformed a few pebbles into thousands.

Since the kaleidoscope shown here doesn't use pebbles, we've added a wide-angle lens to slightly distort incoming images of the real world. These images formed by the lens are reflected in the mirrors to form an array of triangular images.

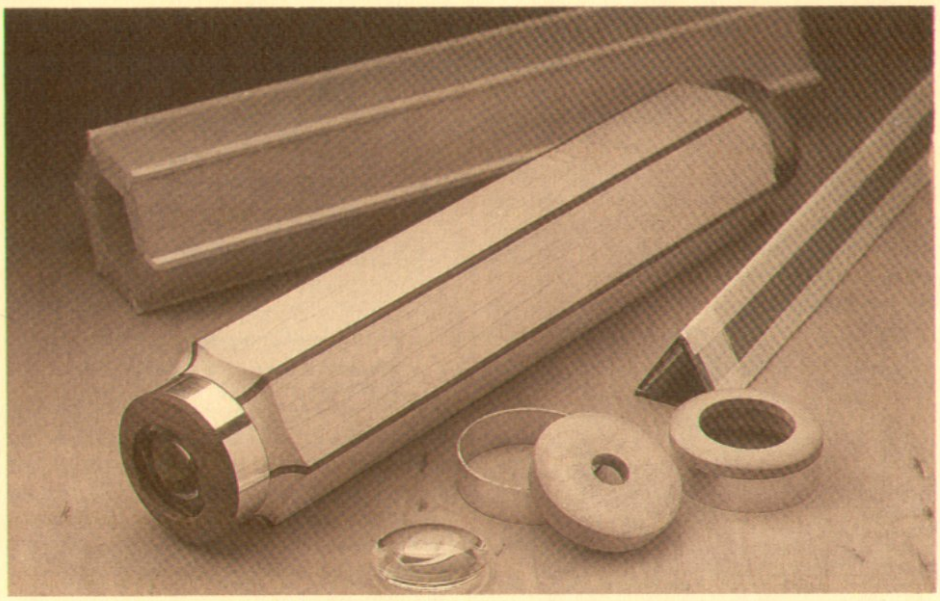

THE BODY

The kaleidoscope body is a hollow wooden hexagon. The ends are turned to accept brass rings that hold the lens and eyepiece. While this is a candidate for a lathe project, it's even easier to make on a router table — using a special turning jig. (See page 8 for more on how to make this jig.) But before any turning can be done, the hexagonal body has to be made.

CUT THE SLATS. The slats for the body are bevel ripped from ½"-thick stock 12" long. Begin by tilting the blade to 30°. Next, adjust the fence so the width from the point of the bevel to the fence is 1½". Then rip the bevel on one side of all six slats, see Fig. 1 and Step 1 in Fig. 2.

SECOND PASS. To bevel the opposite edge, move the fence so the face of the slat (point to point) is 1⁵⁄₁₆" wide. Then make this second cut on all six pieces, see Step 2.

GLUE BODY. After all the slats are beveled on both edges, the angled surfaces are glued together to form the hexagonal body. Begin by applying glue to one surface of all six slats. Next, stand the slats on end to roughly align the outside edges.

To clamp the parts together wrap the body with rubber bands, see Fig. 3. Note: It's not critical to make the joints *absolutely* perfect. Any imperfections will be corrected in the next step. After the glue dries, cut off the ends so the body is 11¾" long.

ACCENT STRIPS

The next step is to inlay contrasting hardwood accent strips into the corners where the slats join. When the kaleidoscope is finished these strips will look like ⅛" wide lines (and completely conceal any gaps in the glue joints.)

KERFING JIG. To make sure the kerfs for the accent strips are cut parallel to the glue joints, a simple jig is needed. Begin making the base of the jig by ripping a 30° bevel on one side of a piece of stock about 2" wide, see Fig. 4. Then screw this piece to a second piece to form an "L" shape so the jig can be clamped to the fence.

POSITION JIG. To position the jig so the saw blade cuts a kerf centered on the glue line, the lower edge of the jig's beveled base has to be undercut slightly at 30°, see Detail, Fig. 4.

Now the jig is aligned by holding the scope body against the jig. Then adjust the fence until the blade is centered on the glue line. Rip kerfs ⅜" deep on all six corners.

INSTALL STRIPS. After the kerfs are cut, inlay strips are ripped from ½"-thick stock to fit the kerfs. (See Tips & Techniques, page 3, for a tip on ripping thin strips).

After cutting the strips, glue them into the kerfs. When the glue is dry, plane the strips flush with the slats, see Fig. 5.

FIGURE 1

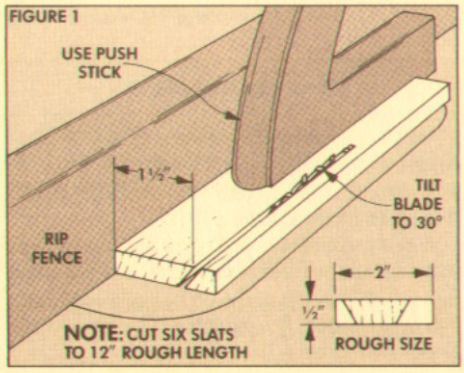

FIGURE 2

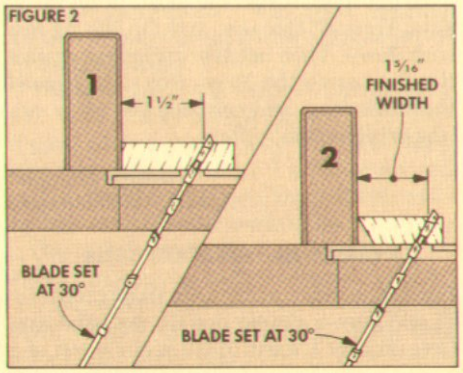

FIGURE 3

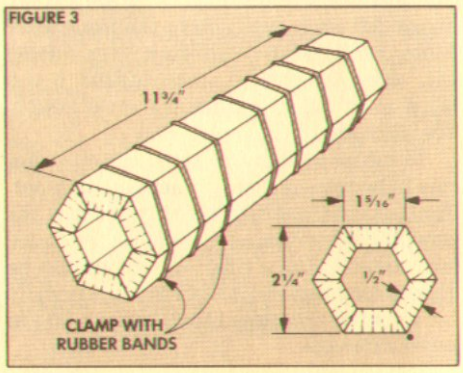

RINGS AND ROUNDING

Now the real fun begins — turning the ends of the body, without a lathe. The ends have to be turned to fit brass rings. So, I began by making the brass rings that determine the outside diameter of the ends.

CUT RINGS. The ½"-long rings that fit over the ends of the body are cut from 2"-diameter brass tubing (see Sources, page 24). To cut the rings square, I wedged the tube into a simple miter box, see Fig. 6. After cutting off the first ring, I smoothed the sawn end with a file using the miter box end as a guide, see Fig. 7. Then saw off the second ring to match the first.

CENTERING PLUG. After cutting off the rings, make a centering plug to serve as a pivot when turning the body on the router table. Begin by resawing a hardwood scrap so its thickness is the same as the width of the inside face of the slats, see Fig. 8. Next, rip the piece so its width matches the distance between two opposite walls of the body. Then cut the piece about 2" long.

INSTALL CENTER. The block spins on a short length of ½" dowel. So bore a ½" hole in the center of the block and insert the dowel so it projects 3/16", see Fig. 8.

ROUTER TABLE TURNING

Now the ends of the body can be turned on the router turning jig in two steps. (See page 8 for more on this jig.)

RING SHOULDER. The first step is turning straight shoulders on each end to hold the brass rings. Begin by mounting a ¼" straight bit in the router so it projects ¼". Next, set the end of the dowel into a hole in the sliding adjustable center on the turning jig, see Fig. 9. Then adjust the center so the corners of the body just miss the bit (about 1⅛" between the edge of the bit and the centering hole).

ROUT SHOULDER. Now turn on the router and move the sliding center until the bit takes a light cut off one of the corners. Then rotate the body clockwise to make the first pass, see Fig. 10.

After making the the first pass, increase the depth of cut (about 1/16"), see Fig. 11. Repeat until the brass ring slips tightly onto the end, see Fig. 12.

SET DEPTH STOP. When the ring fits, set the depth stop on the sliding center and repeat the sequence on the other end.

COVE CONTOUR. After the ring shoulders are routed, a cove is routed to blend the ring shoulder into the flat sides of the body. To do this, mount a ¾" core box bit in the router so it projects ⅝" above the table surface. Then make progressively deeper passes until the shoulder at the base of the cove matches the thickness of the brass ring, see Fig. 13.

Before making the other parts for the kaleidoscope, I sanded it and finished the body with two coats of tung oil.

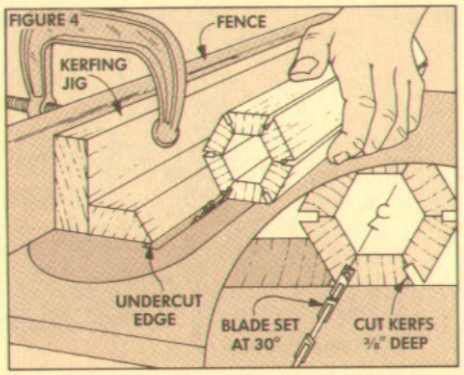

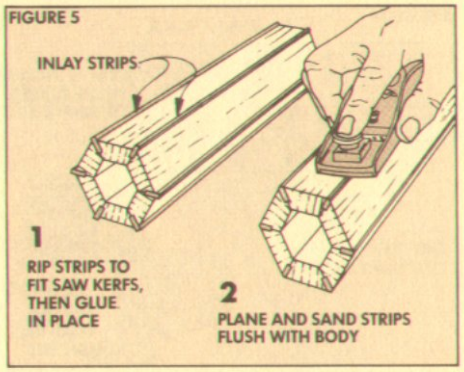

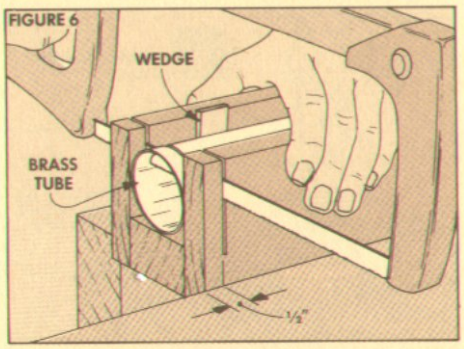

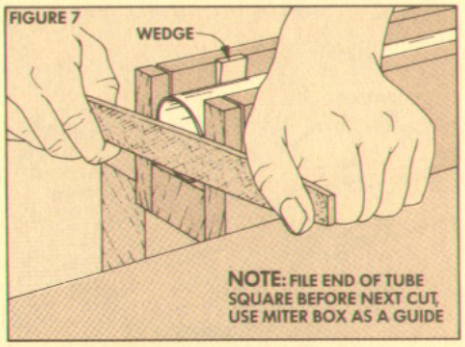

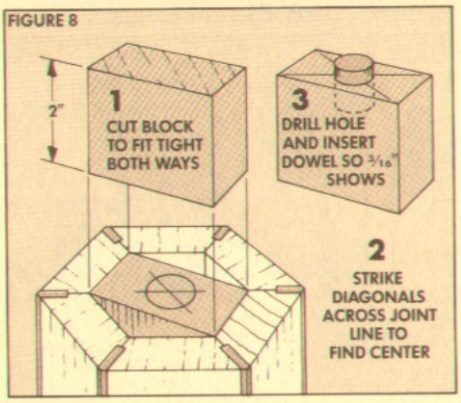

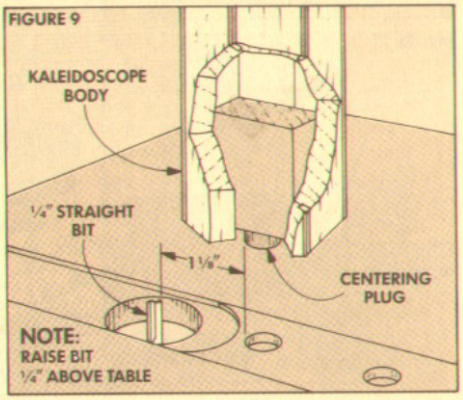

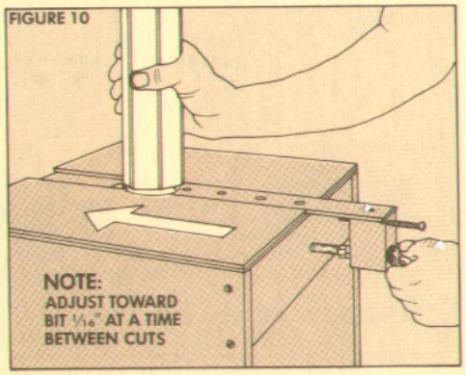

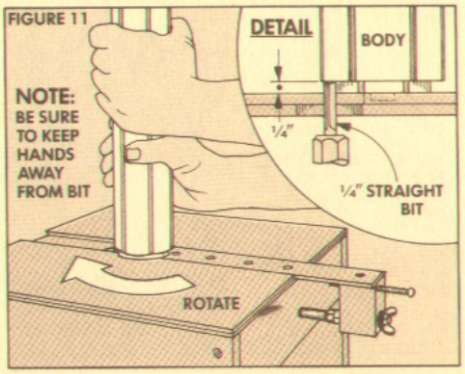

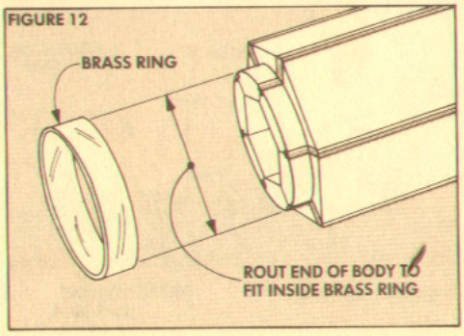

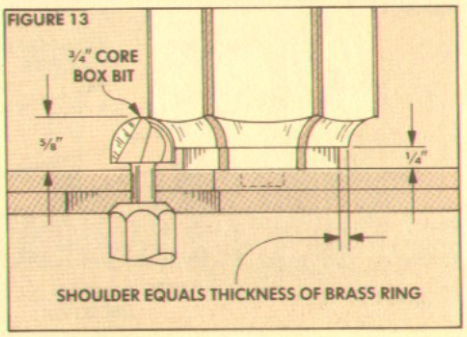

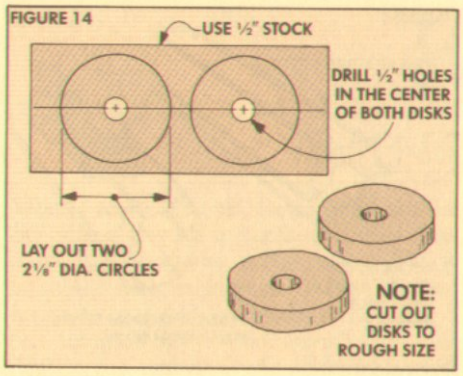

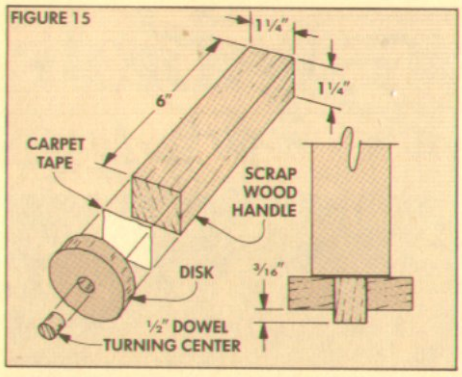

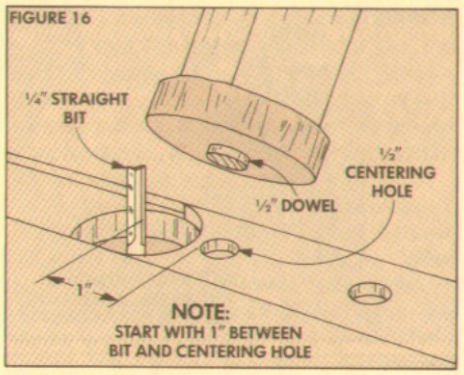

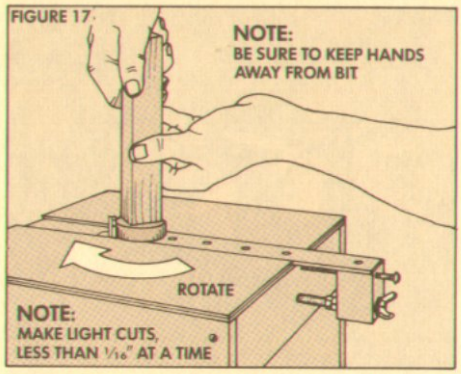

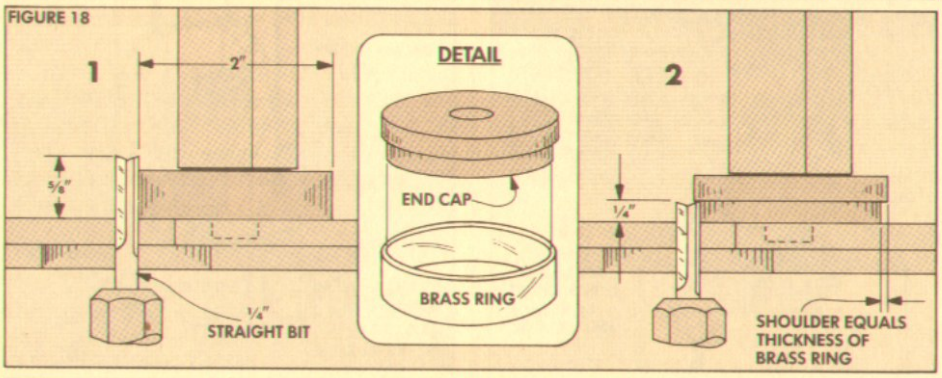

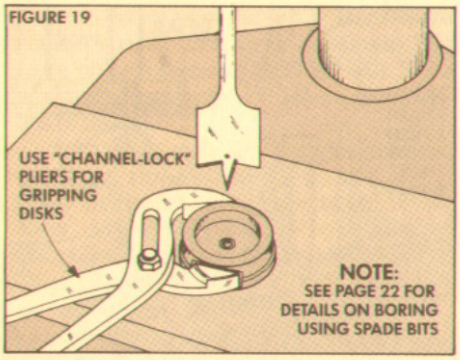

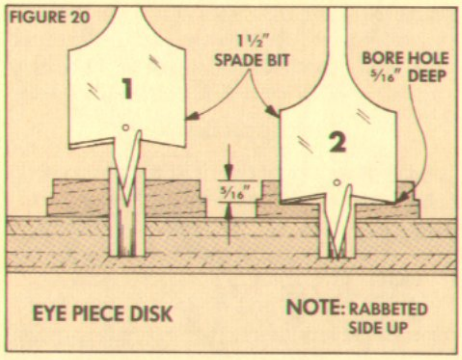

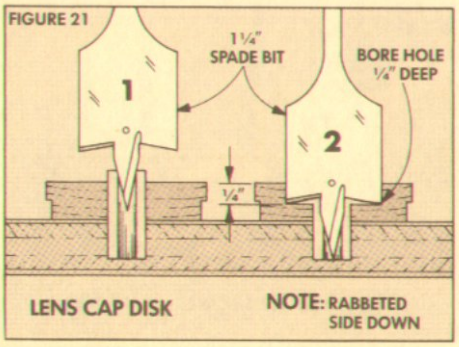

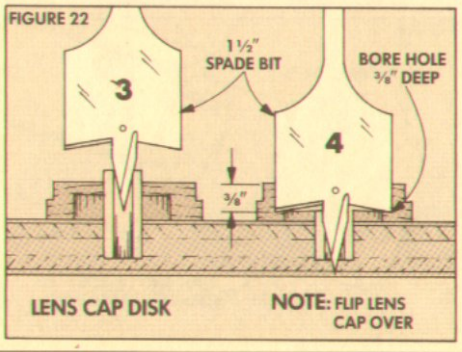

END CAPS

While the finish on the kaleidoscope body was drying, I turned my attention to the inner workings. The first step was making the end pieces that fit into the brass rings and hold the eyepiece glass and lens.

CAP DISKS. The end caps start out as two oversized disks cut from ½"-thick stock. Begin by drawing two 2⅛" dia. circles, see Fig. 14. Next bore a ½" hole through the centerpoint of each circle. Then rough-cut the disks with a band saw or saber saw.

TURNING HANDLE. The disks are "turned" to finished size with the technique used to round the ends of the body. To do this safely, I made a handle from a 6"-long scrap ripped to 1¼" square, see Fig. 15.

Next, stick the disk to the end of the handle with a piece of double-sided carpet tape. Then insert a short length of ½" dowel into the hole in the disk to act as a turning center.

SIZE DISK. Now the disk is reduced to the same diameter as the *outside* diameter of the brass rings. Begin by setting the router so a ¼" straight bit projects about ⅛" higher than the thickness of the disk. Then set the sliding center so the edge of the disk just clears the bit (about 1" between the edge of the bit and the centering hole), see Fig. 16.

Now turn on the router and slowly twist the handle while adjusting the sliding center toward the bit. When the bit starts to cut the edge, take a light cut off the edge of the disk, see Fig. 17. Keep making adjustments until the disk diameter matches the *outside* diameter of the brass rings, see Fig. 18.

TURN SHOULDER. After the diameter of the disks matches the outside ring diameter, a shoulder is turned to fit the *inside* diameter of the the rings. To do this, first lower the bit so it projects ¼" (one half the thickness of the disk). Then adjust the center and turn the disks until the shoulder fits tightly into the ring, see Fig. 18.

FITTING THE LENS

When the disks fit the rings, they're bored to hold the lenses. Although Forstner bits would be excellent for this, I didn't have the large sizes needed (and couldn't justify buying them for just a few holes). So I did this boring with spade bits. (For using spade bits to enlarge holes, see page 22.)

EYEPIECE. The eyepiece doesn't need a lens. Instead it has a flat piece of glass (mainly to keep dust out). To bore the recess for this piece of glass, first place a centering dowel on the drill press jig, see Fig. 19. (For more on this jig, see page 22.) Then use a 1½" spade bit to bore the recess in the eyepiece 5/16" deep, see Fig. 20.

LENS CAP. The lens cap has a larger opening than the eyepiece to admit light through the lens. And the inside surface is recessed to hold the viewing lens. This hole and recess are bored in two steps.

BORE OPENING. The smaller outside (1¼") opening is bored first. To do this, place a new centering dowel in the board. Then bore the hole ¼" deep, see Fig. 21.

BORE LENS RECESS. To bore the 1½" lens recess on the inside surface, put another centering dowel in the board. Now flip the lens cap over and center it over the dowel. Next grip it with "channel-lock" pliers (see page 22), and bore ¾" deep to leave a shoulder for the lens, see Fig. 22.

CONTOUR CAPS. Now the edges of the caps can be contoured. To do this, begin by scribing a line around the rim of each cap ⅛" from the outside edge, see Fig. 23. Then round the caps from the edge of the holes to these lines, see Fig. 24.

INSTALL LENSES. After the caps are contoured the lenses can be glued in place. Apply a small dab of clear silicone sealant to four points on the edges and press the lenses into the caps, see Fig. 25.

INSTALL RINGS. Now the rings are installed. I used silicone for glue (it holds if the caps shrink in the rings), see Fig. 26.

MIRROR TUNNEL

All the external parts of the kaleidoscope are now complete. Next I turned to making the mirror tunnel that lines the body. I began by cutting three 12"-long mirror strips.

CUTTING JIG. To cut the mirror strips uniformly, I made a simple jig out of two pieces of ¼" Masonite. Begin by gluing a narrow strip on a wide piece so a step is left that's as wide as the mirror, plus the thickness of the cutter, see Fig. 27

Note: This measurement was 1 1/16" for our kaleidoscope. To determine the width for other sizes, measure between the inside walls, then subtract 3/16" (a little more than the thickness of the mirror plus a little for the thickness of the cutter), see Fig. 30.

SCORE MIRROR. To use the jig for scoring, lay it on the mirror (with the glass side up) so the step butts the edge of the mirror. Then make one smooth stroke along the edge with a glass cutter to score a break line, see Fig. 28.

BREAK ON LINE. To break the mirror on the line, place the scored line over the edge of a piece of Masonite, see Fig. 29. Then hold the mirror with one hand and press down on the jig with the other. The mirror will snap cleanly on the break line.

ASSEMBLE MIRRORS. After the mirror strips are cut, they're taped together. I used duct tape and made sure all three edges lapped the same way, see Fig. 30.

FINAL ASSEMBLY. Now all that's left is putting the parts together. Put a bead of silicone along each edge where the mirrors are taped together. Then slip the mirror assembly into the body. Finally, put a few dabs of silicone on the inside edges of the brass rings to glue the end caps to the body.

Now you have a magical look at the world. And it's all done with mirrors.

FIGURE 23

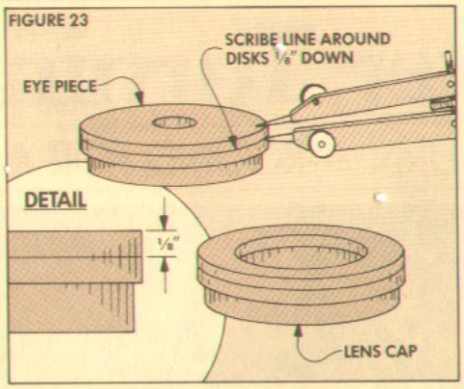

FIGURE 24

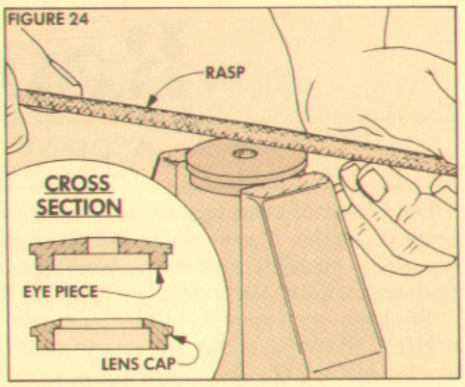

FIGURE 25

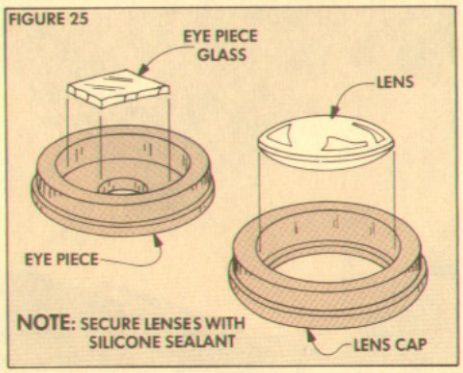

FIGURE 26

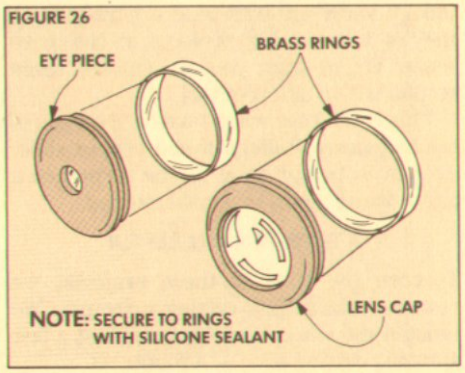

FIGURE 27

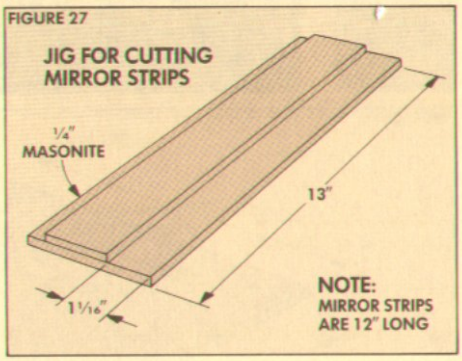

FIGURE 28

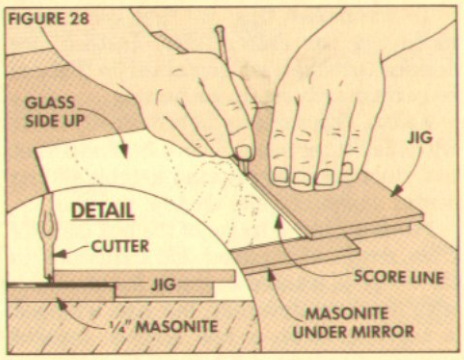

FIGURE 29

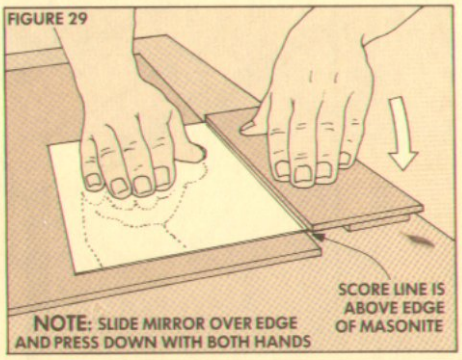

FIGURE 30

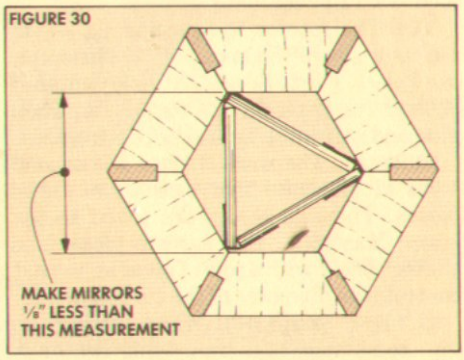

FIGURE 31

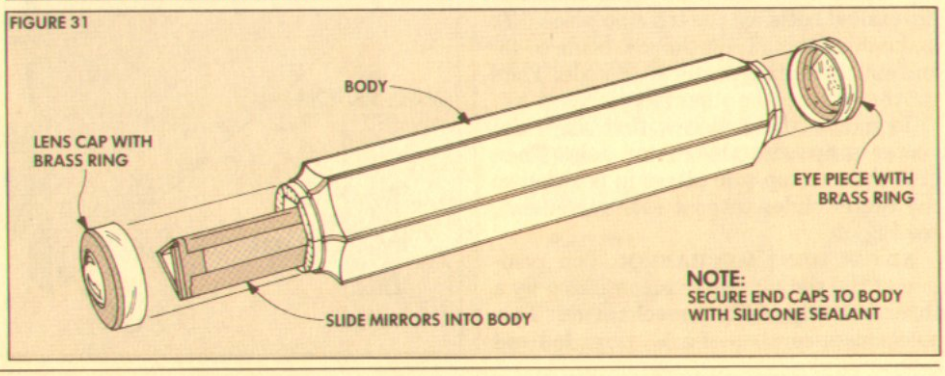

Router Turning Jig

A REAL TURN-A-ROUND FOR A ROUTER

When I think of a turning project, I usually think of a lathe. The whole idea of making something round is to spin the workpiece fast against a stationary cutting edge.

But there are two problems with turning projects. The first is that not every woodworker has a lathe. The second is that even though some projects need a part turned, they're not turning projects in the pure sense. Or, at least you can get the same results with a different tool.

This is the case when turning the ends of the kaleidoscope and salt and pepper shakers. Even though they can be turned on a lathe, we needed a universal method.

A TURN FOR THE BETTER

To turn the ends on these projects, we reversed the lathe's cutting principle. We twisted the workpiece slowly against a fast spinning cutting edge — a router bit.

To accomplish this, we first considered modifying our router table. Instead, we decided to make a self-contained jig that can be permanently set up for turning.

A BOX. This turning jig is basically a box with the router mounted inside. The secret to its turning ability is an adjustable sliding center dovetailed into the top, see photo.

FRAME. The ¾" frame of the box is made from scraps of plywood and hardwood in the shop. (I wanted to make it out of oak with hand-cut dovetails, but Ken whipped it together with a few screws while I answered a phone call.)

TOP. The top for the turning jig starts out as a single thickness of ¼" Masonite, see Fig. 1. First, bore a 1¾" hole centered 8" from the front for the router bit. Then glue and screw the top to the box frame.

SURFACE. The work surface is a second layer of Masonite that consists of three pieces. The side pieces are glued to the lower Masonite. The narrow piece is a sliding center with a row of pivot holes that controls the diameter of the turned piece.

CUTTING SEQUENCE. When cutting the top, remember that the sliding center is dovetailed between the top side pieces. To make this dovetail, tilt the saw blade to 45° and cut the sliding center to 2" wide. Then cut the edges of the other two pieces at 45°.

To mount these pieces, first align the center strip with the router hole. Then glue the two top side pieces in position so the center slides without side movement, see Fig. 2.

ADJUSTMENT MECHANISM. The position of the sliding center is controlled by a threaded adjustment mechanism. This mechanism consists of a ⅜" threaded rod

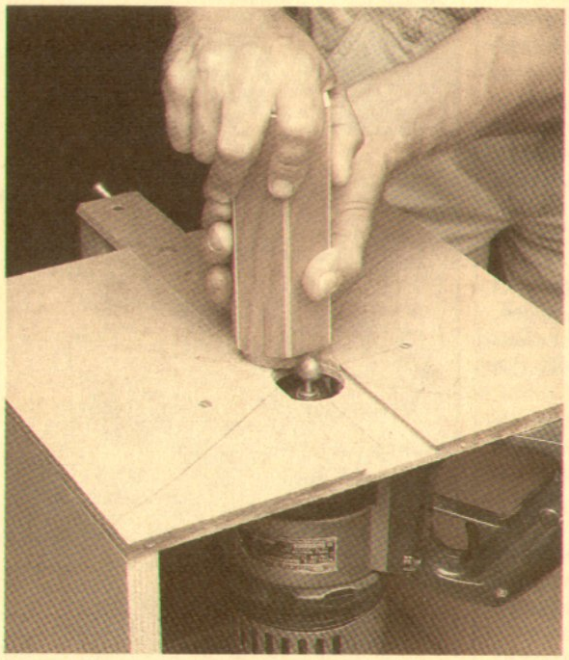

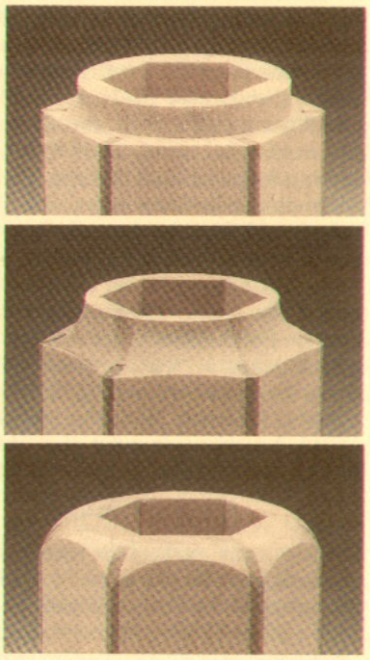

FIGURE 1

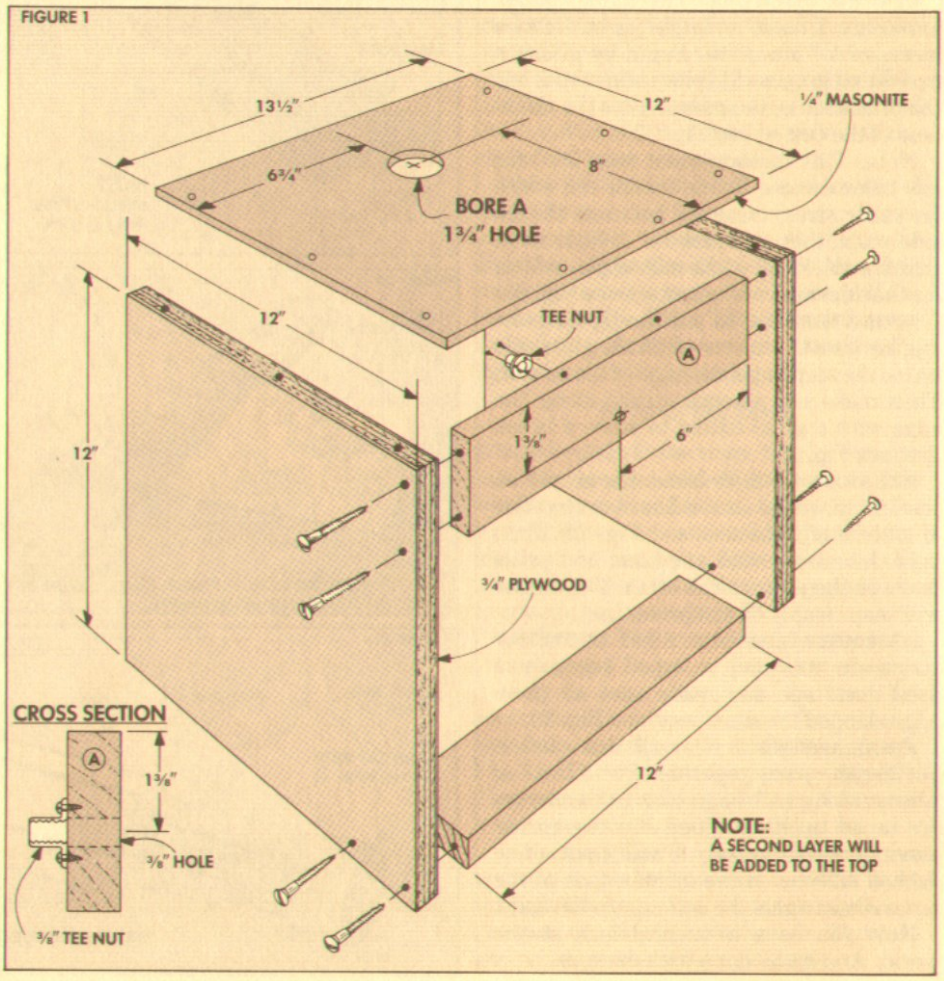

that allows minute adjustments, see Fig. 3. There's also a ¼" x 3½" machine screw that acts as a depth stop. These are mounted in a block that's fastened to the end of the sliding center, see Detail, Fig. 2.

BLOCK. Cut this block from hardwood. Next bore the 3/16" hole for the stop screw and the ⅜" hole for the adjustment rod. Then screw and glue the block to the end of the sliding center, see Detail, Fig. 2.

THREADS. The adjustment rod threads into a T-nut that's mounted in the support brace (A), see Fig. 1. To position the hole for the T-nut, push the sliding center into position so the block is against the brace (A). Next, bore a ⅜" hole through the brace using the hole in the block for alignment. Then mount a ⅜" T-nut on the *back* of the brace with the threaded section projecting inside the box, see Detail A, Fig. 1.

ADJUSTMENT ROD. To make the adjustment rod, first cut a section of ⅜" threaded rod 8½" long. Next, secure a wing nut to one end by drilling a 3/32" hole through the nut and rod. Then drive a 6d nail through the hole and snip off the ends.

SECURE ROD. The rod is secured by jamming two nuts against each other. To keep the mechanism from spinning on its own, I slipped a rubber washer between two steel washers onto the rod on both sides of the block.

STOP ROD. To install the stop rod, screw a ¼" x 3½" machine screw through the top hole in the block.

USING THE JIG

The trick to using the jig is positioning the workpiece so it can pivot in one of the holes in the sliding piece while the edge turns against the bit. Then the threaded rod is adjusted inward to control the diameter of the cut. Obviously, some kind of center is needed to fit in the holes in the sliding piece.

THREE CENTERS. Using the jig, I found that three kinds of centers will handle almost any project. The choice depends on whether the project is solid or hollow and if the finished end will be covered.

SOLID PROJECT. If the workpiece is solid and the end will be covered, the simplest center is a short length of ½" dowel. Just bore a ½" hole into the center of the end of the workpiece and insert the dowel so it projects 3/16" to fit into the sliding center.

FINISHED END. If the piece is going to be the finished end (like the tops of the shakers), a hole can't be drilled for the center. In this case make a flat plate ½" thick and bore a hole for the dowel. Then use carpet tape to stick the plate to the workpiece.

HOLLOW END. If the workpiece is hollow (like the end pieces on the kaleidoscope), a core-type center is needed. To make one, cut a rectangular block to fit inside the end and bore a hole through the center to hold the dowel. Then insert the block into the workpiece.

FIGURE 2

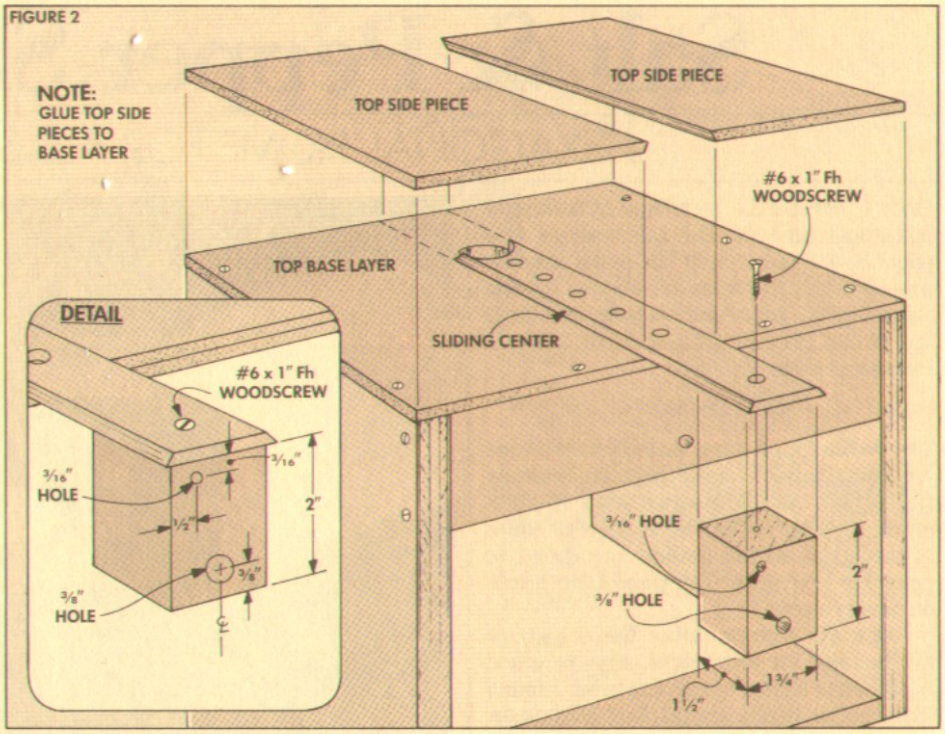

FIGURE 3

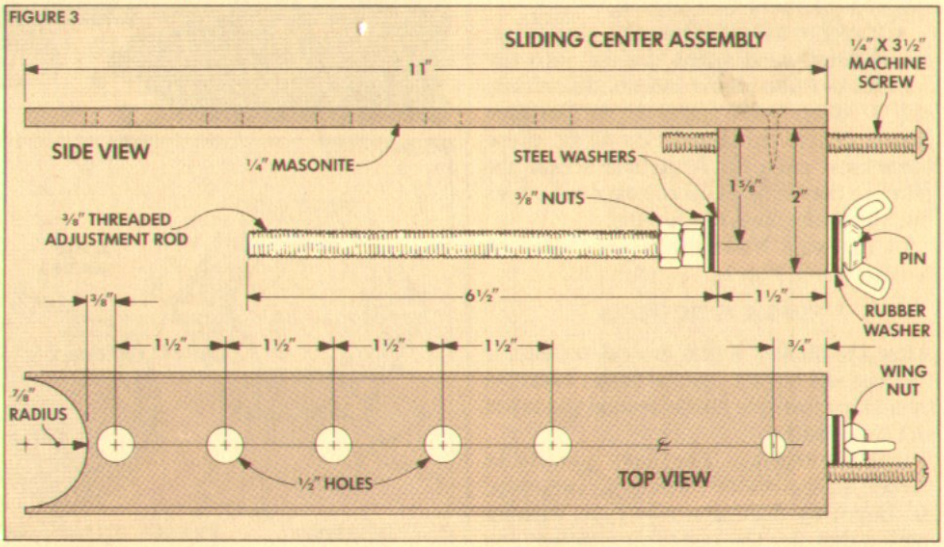

FIGURE 4

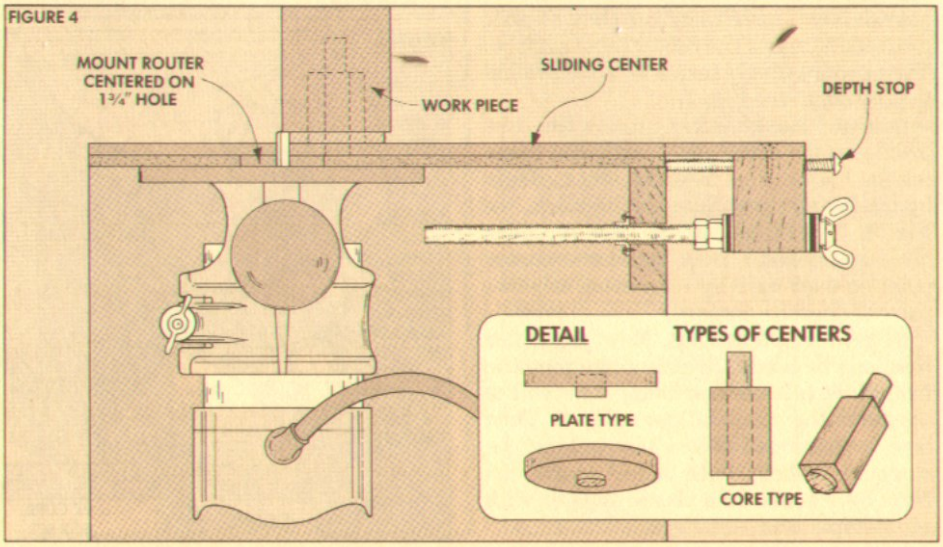

Salt & Pepper Shakers

HEXAGONAL HOME FOR ALL SEASONS

Once I learned the technique of making a hexagonal tube for the kaleidoscope (see page 4), I couldn't help but make another project using the same technique. I made this complete set of salt, pepper, and large (parmesan cheese) shakers from a single hexagonal tube.

MAKE THE BODY

The bodies for all three shakers start as one hexagonal tube. To make this tube, begin by ripping six 10⅜"-long strips from ½"-thick stock, see Fig. 1. Then bevel rip both edges of the strips so the outside face (point to point) is 1 5/16" wide. (See page 4 for details on bevel ripping.)

GLUE TOGETHER. After the six strips are beveled on both edges, they're glued together to form a hexagonal tube. I found that rubber bands are the best clamps for this type of gluing (see page 4).

ACCENT STRIPES. When the glue dries, contrasting wood strips are set into the corners to make accent stripes. To do this, cut ⅜" deep kerfs centered on the glue joints. Next, rip thin strips to fit these kerfs (see page 5). After the strips are glued in the kerfs, plane the exposed edges flush with the faces of the tube.

CUT TO SIZE. Now the shakers can be cut to length, see Fig. 1.

TOPS AND BOTTOMS

After the shaker bodies are cut to length, the tops and bottoms can be made. I started by making the cove profile around the top of all three shakers.

COVE PROFILE. The cove profile is turned on the router turning jig (see page 8). Begin by making a core-type turning center that fits the inside the bodies, see page 5. Next, install a ¾" core box bit so it projects ⅜" above the router table surface. Then progressively turn a ⅜" cove around the top edge, see Fig. 2.

CUT OUT BASES. After turning the cove profile on the top ends, I made the bases for the bodies from ⅜"-thick stock. Begin by tracing all three bases on the stock, see Fig. 3. (They'll be cut out after the filler holes are bored.) Then locate the center point on each base by connecting any two pairs of opposite corners.

BORE FILLER HOLES. Now the filler holes can be bored. Begin by clamping the base stock to a backing board (to stabilize the tip of the spade bit), see Fig. 4. Then bore a thumbnail recess (for pulling the stopper) ⅛"-deep with a 1½" spade bit. Next bore a hole for a plastic stopper with an 11/16" spade bit, see Fig 4.

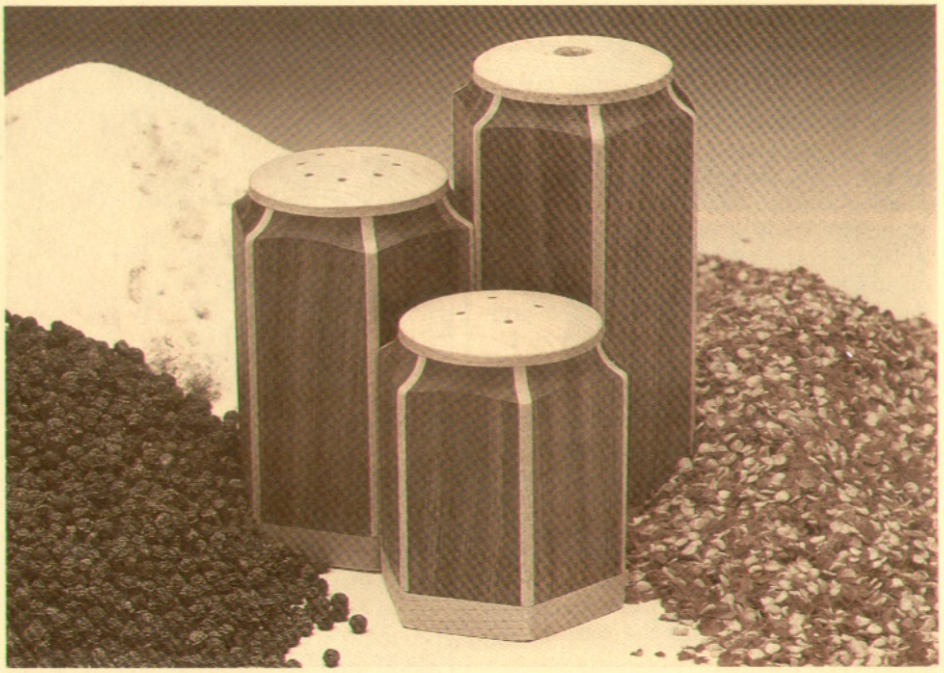

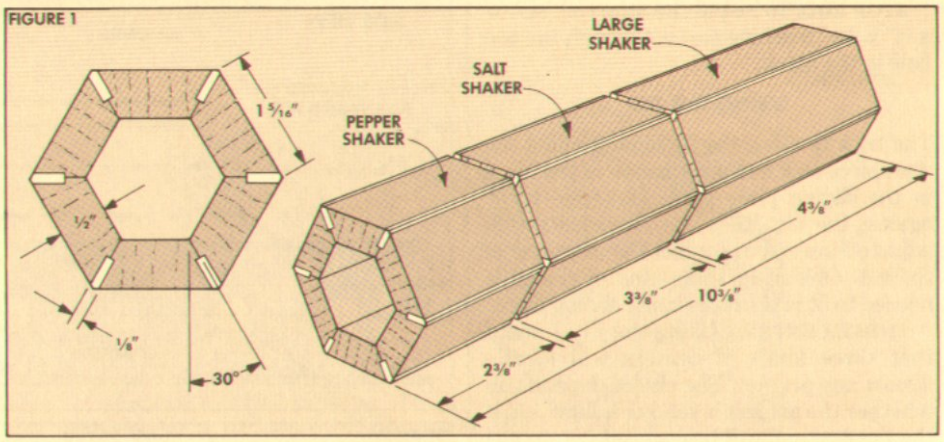

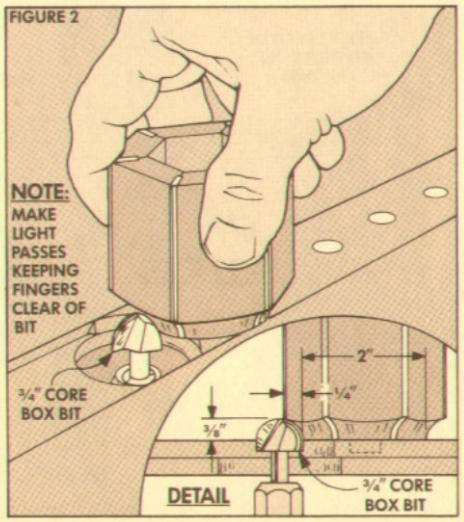

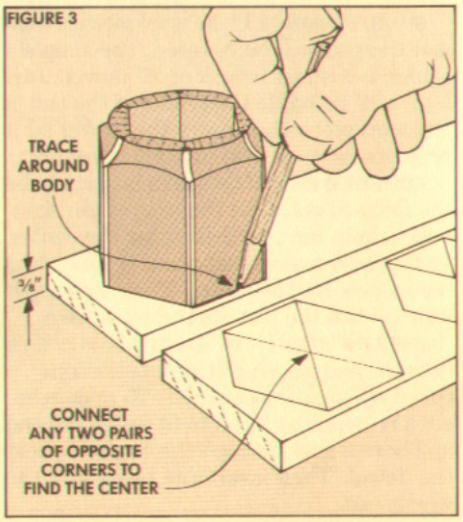

CUT TO SIZE. After the holes are bored in all three bases, cut them to rough shape with a band saw.

TURN TOPS

Now the tops can be fitted to the hexagonal bodies of all three shakers. This requires a slightly different approach on the router turning jig than for the kaleidoscope because the shakers don't have a center hole.

TURNING CENTER. The trick to making the tops is to turn disks to match the outside diameter of the coved shoulders on the shaker bodies, see Fig. 7. To do this, a flat "turning center" with a ½" dowel for a pivot is stuck to one side of the disk with double-sided carpet tape, see Fig. 5. Then, to hold the disk while turning, the disk and center are attached to a 1½" square handle with double-side carpet tape.

TURN TO SIZE. To turn the tops to size, use a ¼" straight bit. Adjust the sliding center on the turning jig so the edge of the disk almost touches the bit, see Fig. 6.

Then turn on the router and progressively reduce the diameter of the disk until it's just a little larger than the coved shoulder on the body, see Fig. 7.

SPICE HOLES. After the tops are turned to size, holes are bored for shaking out the spices. For the salt shaker, bore eight 3/32" holes spaced around a 1" dia. circle, see Fig. 8. For the pepper shaker, bore just four holes spaced on a ¾" circle. The large shaker gets a single ⅜" hole. Countersink the inside edges of all the holes to keep everything flowing freely, see Fig. 8.

GLUE TOP AND BOTTOM

After the holes are drilled, the top and bottom are glued to the body.

PRESSURE BLOCKS. When gluing the top and bottom to the body, I used pressure blocks to keep from marring the surfaces. To glue the parts together, spread a thin bead of glue around the edges of the *body*. Then use a C-clamp to hold them in place, letting the pressure blocks spread the pressure evenly, see Fig. 9.

ROUND TOPS. After the glue dries, the tops are rounded over. Begin by using a compass to draw a line around the edge of the tops ⅛" down, see Fig. 10. Then use a wood rasp or file to round the top smoothly to this line.

DRESS EDGE. Next the edges are dressed flush with the body. To do this, wrap 120-grit sandpaper around a ¾" dowel and blend the cove profile and the edge of the top at the same time, see Fig. 11. To dress the bottoms, I used a sanding block to bring the edges flush with the sides.

Then I applied two coats of Behlen's salad bowl finish (on the outside only). I left the inside bare wood.

STOPPER. All that's left is filling the shakers and plugging the bottom with a cork or plastic stopper, see Fig. 12.

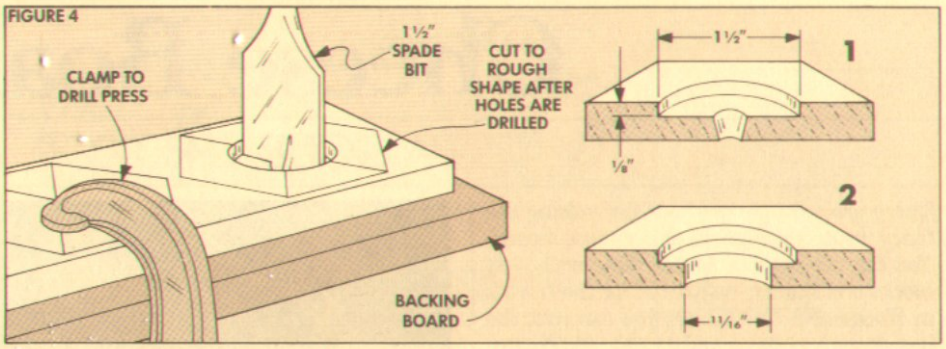

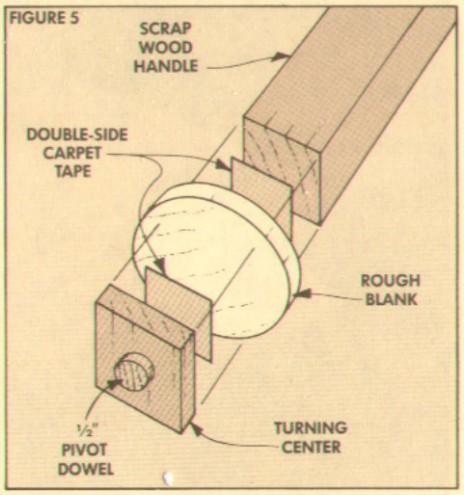

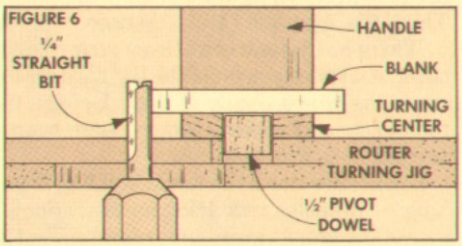

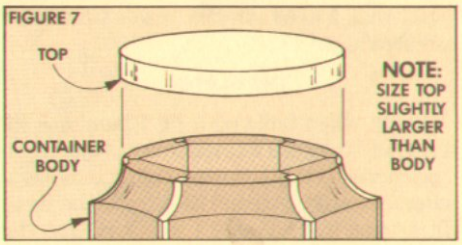

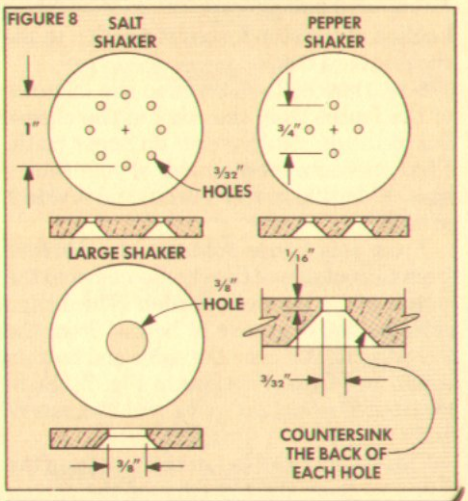

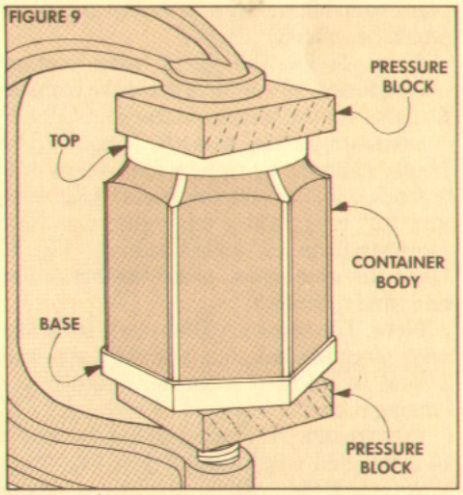

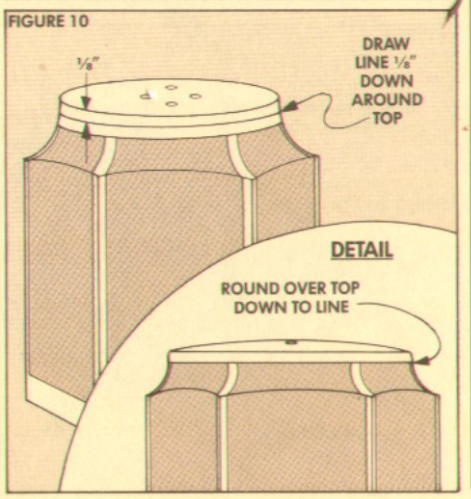

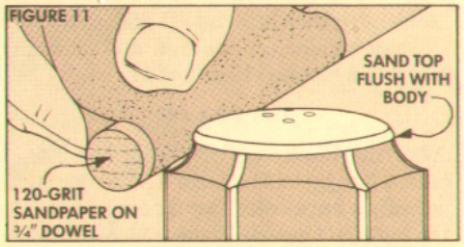

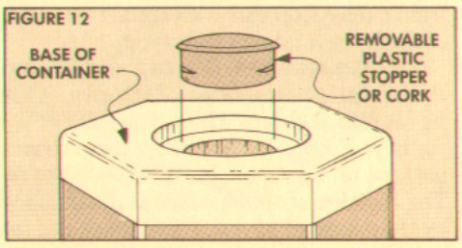

Cheese Board

A GOUDA PROJECT

There are a couple methods for making the fancy routed design in this cheese board. You can set up your router table with stop blocks and spacers (as we did for the trivets in *Woodsmith* No. 41). Or you can rout the design with a box jig and a hand-held router. That's the approach I took this time.

With a box jig you don't tie up your router table. And once you build the jig, it's easy to use in the future. Just pull it out, fasten it to the bench, and make another cheese board as a gift — a year from now.

Sometimes that's the fun of building from a jig — it makes rebuilding an exact duplicate of the project quick and accurate. That's just what I need for this year's Christmas presents.

THE BLANK

Usually when building a jig I build the jig first, and then use it to make the project. For the cheese board I started out by building a cheese board blank and then made the jig to fit around it. That way I was sure that the blank would fit tightly into the jig and the jig would be square.

Note: To use the jig to make another cheese board, you do have to cut the blank to fit tight into the opening in the jig.

BUILDING THE BLANK. To make the blank, I started by ripping four pieces of 4/4 stock (13/16" actual thickness) 1¾" wide and 12" long. Then edge-glue the four pieces to form a 7"-wide blank, see Fig. 1. Once the glue dries, plane the blank flat and sand it smooth.

Note: The blank could be made from one wide piece of stock, but it might warp, and I tend to think of a cheese board like a cutting board — it should be built up.

CUT TO SIZE. After the blank is flat, cut it to a finished width of 6½", see Fig. 1. It looks best if the joint line is centered on the blank, so trim a little bit off each side.

Then square up one end and trim the blank to a finished length of 11".

THE BOX JIG

After the blank was cut to finished size, I built a box jig to fit around it. The box jig is actually a frame with stop fences screwed to the top of it. Once the blank is placed into the frame, the router can work around the inside of the fences and rout the design.

AN EXPLANATION. Before going any further, a little explanation of the size of the jig seems necessary. The whole point of the jig is to rout a border and checkerboard pattern of V-grooves in the cheese board. The location of this pattern is determined by the diameter of your router base *and* the location of the stop fences in relation to the cheese board blank.

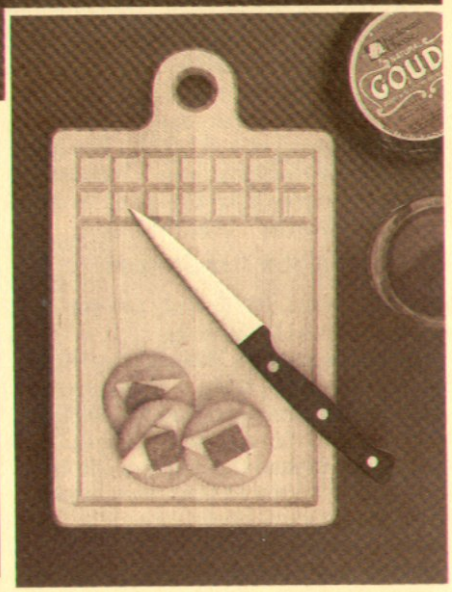

SOME MATH. To determine the distance of the fences from the edge of the cheese board blank, you have to do some math. First, measure the diameter of your router base (6" for the router I used) and divide it in half (3").

From this figure subtract the distance from the outside of the cheese board to the center of the V-groove border. (The design calls for the V- groove to be 2⅝" from the top edge and ⅝" from the sides and bottom edges, see Cross Sections in Fig. 2.) So in my case: 3" minus 2⅝" = ⅜" and 3" minus ⅝" = 2⅜".

This meant I had to locate the edge of the fence ⅜" from the top edge of the cheese

FIGURE 1

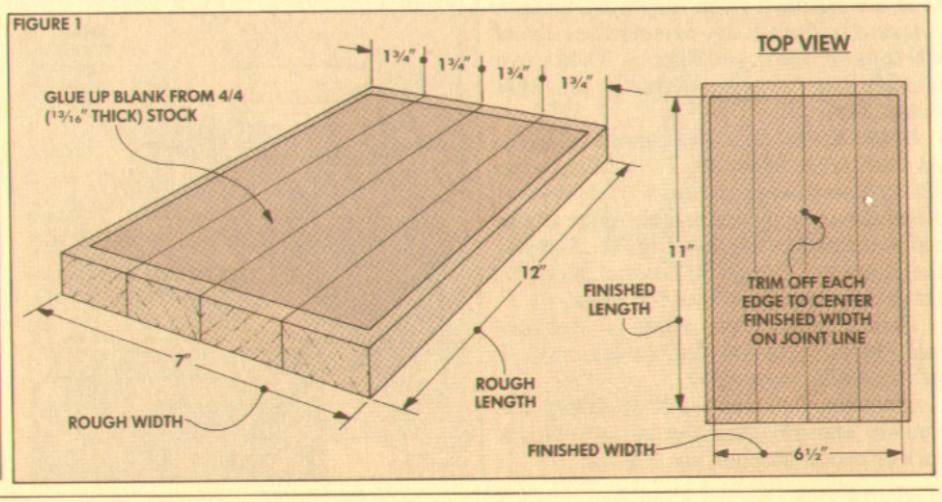

board blank and 2⅜" from the sides and bottom edge, see Fig. 2.

WIDTH OF FRAME PIECES. I decided to make the fences 2" wide, and I wanted to mount them flush with the outside edge of the frame pieces. This meant that the width of the frame pieces had to equal the width of the fences (2") *plus* the distance from the cheese board to the fence (⅜" and 2⅜"). So my top frame piece (A) is 2⅜" wide and side (B) and bottom (C) frame pieces are 4⅜" wide, see Fig. 3.

Note: Round bases vary in diameter. If your router base is 5¾" (Rockwell/Porter Cable) in diameter, your top frame piece (A) should be 2¼" wide and side (B) and bottom (C) frame piece 4¼" wide. If your router base is 6¼" (Makita) in diameter, your frame pieces would be 2½" and 4½" wide. From this point on, the figures in the artwork and in the parentheses in the text will be for a 6"-dia. router base.

BUILDING THE FRAME. Once all these figures are determined you can get back to constructing the jig. I used ¾" plywood to build the jig. Start building the frame by cutting two side frame pieces (B) to the exact same length as the cheese board blank (11") and to the width determined above (4⅜"), see Fig. 3.

Then, to make it easier to remove the blank from the jig, I cut notches for fingerholes in each piece, see Fig. 3.

Next, cut the bottom frame piece (C) to width (4⅜") and the top frame piece (A) to width (2⅜").

To determine the length of the top and bottom frame pieces, measure the width of the blank (6½") and add the combined width of the two side pieces (8¾"). Then cut the top and bottom frame pieces to this length (15¼").

SIDE FENCES. After the frame pieces are cut to length, the fences can be cut. The side fences (D) create a lap joint over the top and bottom frame pieces to hold the frame together, see Step 1 in Fig. 4. Cut the side fences (D) 2" wide and 17¾" long.

After the side fences are cut, screw them down to the side frame pieces (B) so the outside edges are flush and there's an overhang on each end, see Step 1 in Fig. 4.

Shop Note: I used drywall screws to screw all the pieces together so I wouldn't have to pre-drill. Nails could be used, but screws are easier to readjust.

SCREW TOGETHER FRAME. Now, clamp the frame pieces together tight around the cheese board blank, see Step 2 in Fig. 4. Then drive screws down through the four corners to hold the frame together.

TOP AND BOTTOM FENCES. Next, measure the distance between the two side fences and cut top and bottom fences (E) to this length and a width of 2", see Fig. 3.

Finally, screw the top and bottom fences down to the top and bottom frame pieces, see Step 3 in Fig. 4.

FIGURE 2

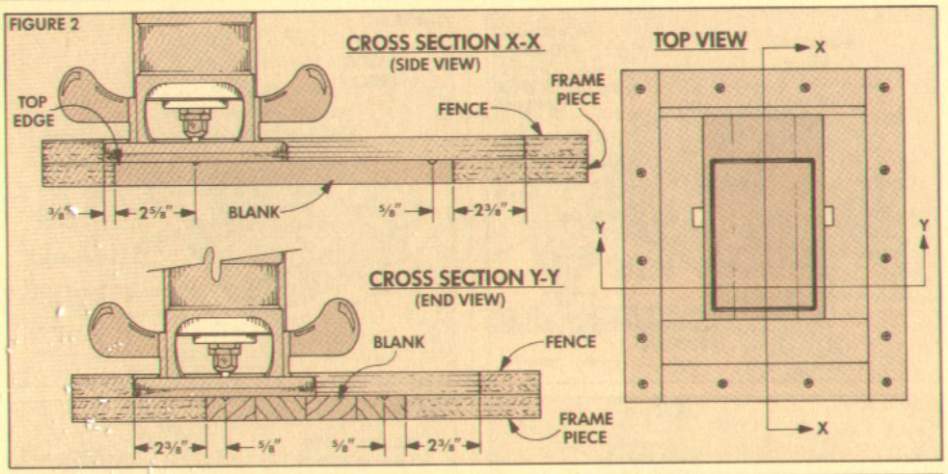

FIGURE 3

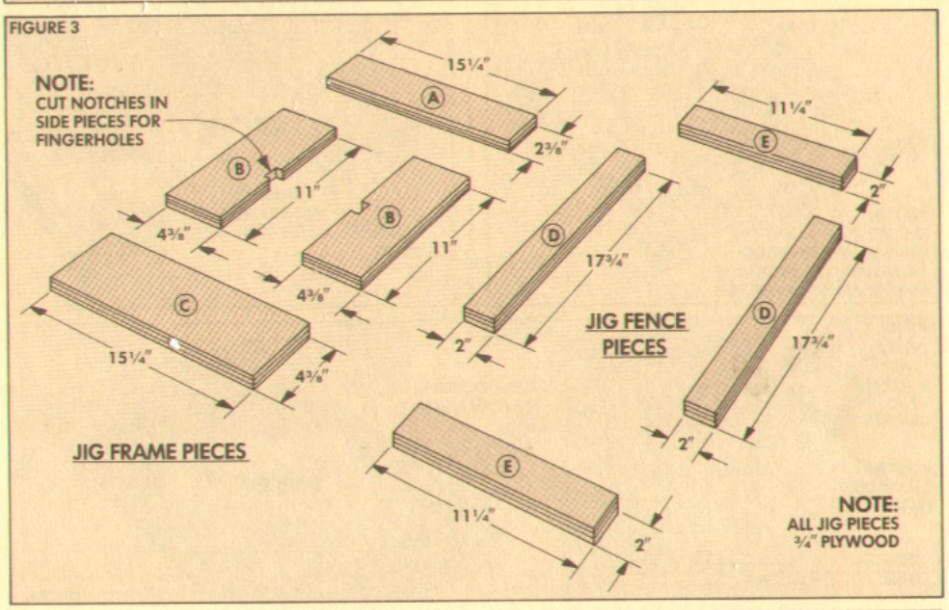

FIGURE 4

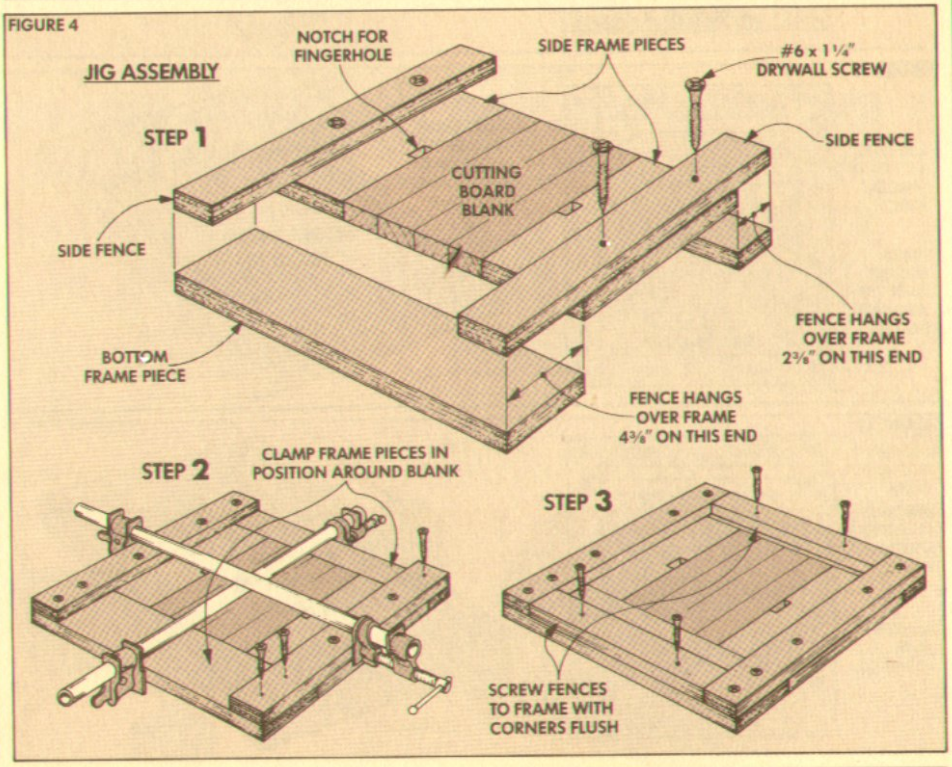

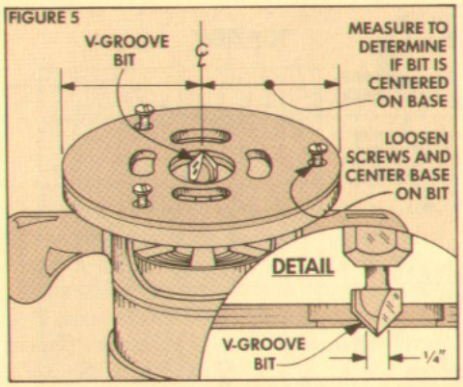

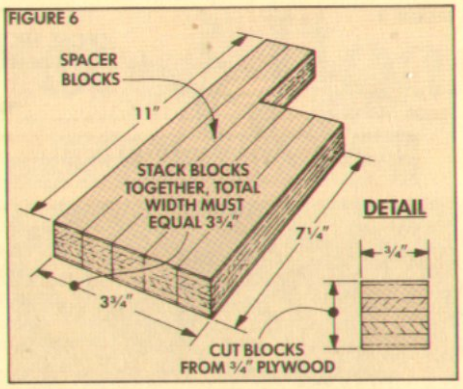

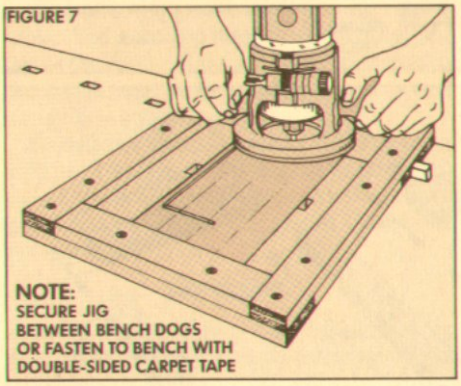

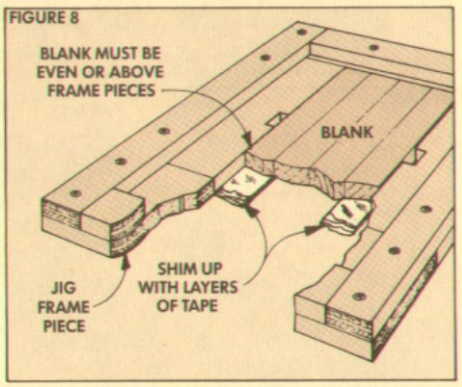

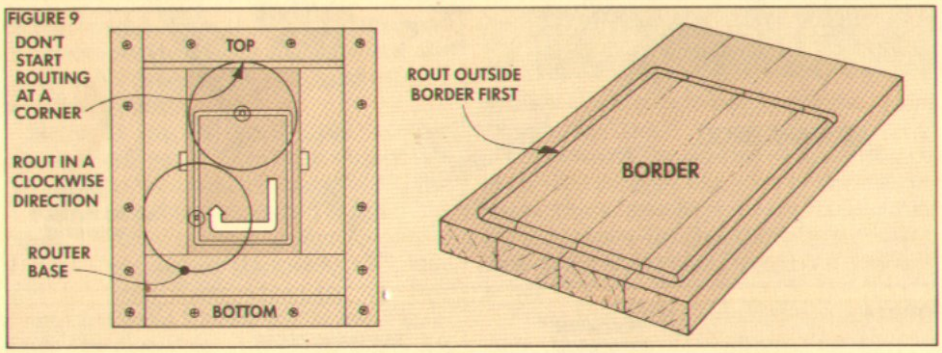

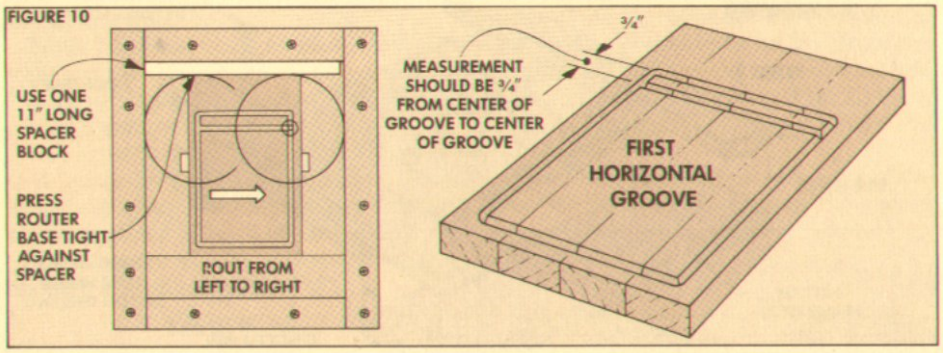

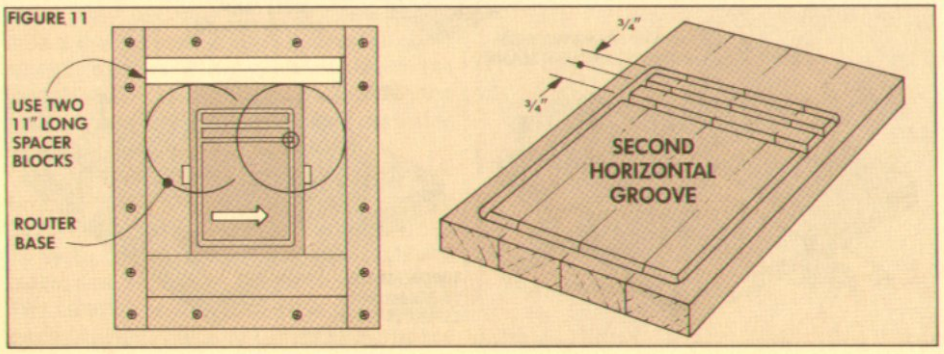

SETTING UP THE ROUTER

After the box jig was built, I set up to rout the border and checkerboard design.

ADJUSTING THE BIT. Start by mounting a sharp ½" V-grooving bit in the router. Then lower the bit to rout a ¼"-wide groove. (Check the depth and width by making a test cut in a piece of scrap, see Detail in Fig. 5.)

CENTER THE BASE. Once the bit is set to the correct depth, check to be sure the bit is perfectly centered on the plastic router base plate, see Fig. 5. If it's not centered, the routed groove won't be a uniform distance from all four fences.

If the bit is off center, loosen the screws and center the base plate on the bit by measuring in at least two directions.

SPACER BLOCKS

Next, I cut five ¾"-wide plywood spacer blocks to use when routing the design. Cut two of the spacer blocks 11"-long and the other three 7¼"-long, see Fig. 6.

Shop Note: To get a perfectly symmetrical design, the cheese board blank should be exactly 6½" wide and the spacer blocks exactly ¾" wide. To check the spacer blocks, stack all the blocks with the saw cut edges tightly together and measure the stack. It should be an increment of ¾" (5 blocks x ¾" = 3¾").

FASTENING DOWN THE JIG

After cutting the spacer blocks, I secured the jig down to my bench between dogs, see Fig. 7. (Or use double-sided carpet tape.)

Next, insert the cheese board blank into the jig and check that the blank sits flush with or slightly above the surrounding plywood frame pieces, see Fig. 8. If the blank is lower, shim under the blank with several thicknesses of tape.

ROUTING THE DESIGN

Finally, the fun begins — the actual routing. To check that everything is set up correctly, I always rout a test blank first. (I used a piece of scrap plywood.)

THE BORDER. To rout the border, hold the router base tight against one of the fences, turn on the router, and lower the bit into the wood. (Don't start at a corner — it tends to burn.) Now rout clockwise around the inside of the jig, see Fig. 9. Move quickly and keep the router base tight against all the fences.

THE HORIZONTAL GROOVES. Once the border is routed, clean out any dust or chips from the jig. Then place one of the 11"-long spacer blocks inside the jig against the top fence, see Fig. 10. (Note: Keep the face of the plywood spacer block up and the sawcut edges to the sides.)

Now hold the router base tight against the spacer block and make a horizontal pass working from left to right. Since the

spacer block is ¾" wide, the center of this groove should be ¾" from the center of the border groove, see Fig. 10.

Next, add another spacer block and make a second horizontal pass working from left to right, see Fig. 11.

STOP BLOCK. After the two horizontal grooves are complete, the short vertical grooves can be routed. These grooves run from the top border groove down to the second horizontal groove. To stop them at the second groove, I cut a stop block from a piece of ¾" plywood.

To determine the width of the stop block, place the V-groove bit in the second horizontal groove and measure the distance from the router base plate to the bottom fence, see Fig. 12. (Mine measured 6¼".) Then cut the stop block to this width and to length to fit between the side fences.

THE VERTICAL GROOVES. Now place the stop block against the bottom fence and one of the 7¼" spacer blocks against the left side fence, see Step 1, Fig. 13. Then, with the router against the spacer block, rout the vertical groove.

Next, insert a second 7¼" spacer block against the first block and rout the next vertical groove, see Step 2, Fig. 13. Finally, insert the third spacer block and rout the third vertical groove, see Step 3.

After the three grooves are routed on the left side, follow the same routing sequence with the blocks against the right fence. (Rout from top down.)

UNIFORM SQUARES. Once the grooves are routed, measure the squares between the grooves for uniformity. If the spacer blocks are the correct size and the bit set to the correct depth, the tops of the squares should be uniform (about ½" x ½").

The first time I measured I found that my middle square was a little narrower than the rest. I made another test piece and that time consciously tried to press the router *tight* against the spacer blocks. This kept the spacer blocks tight against each other and my second test piece was right on the money.

FINISHING OFF THE BOARD

After the routing is complete, lay out three ¾"-dia. holes near the top of the cheese board, see Fig. 14. The first hole is used to hang the cheese board on the wall and the other two form inside arcs when cutting out the handle.

Before drilling the holes, also lay out a 1" radius for the top end of the handle. Then drill the holes and cut the top to shape, see Fig. 14.

RADIUS AND BULLNOSE. Next, round each of the four corners to a ⅜" radius and rout a bullnose profile on all the edges and the hanging hole, see Fig. 15.

FINISH. I finished the cheese board with two coats of Marten's Wood Preservative, see Sources, page 24.

FIGURE 12

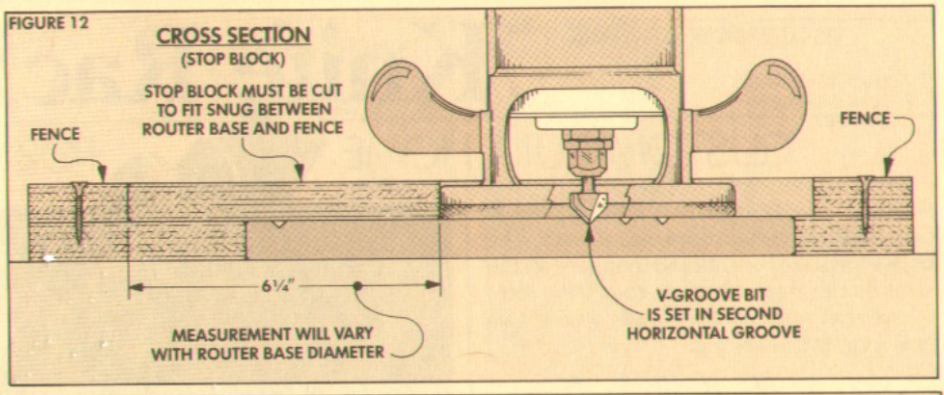

FIGURE 13

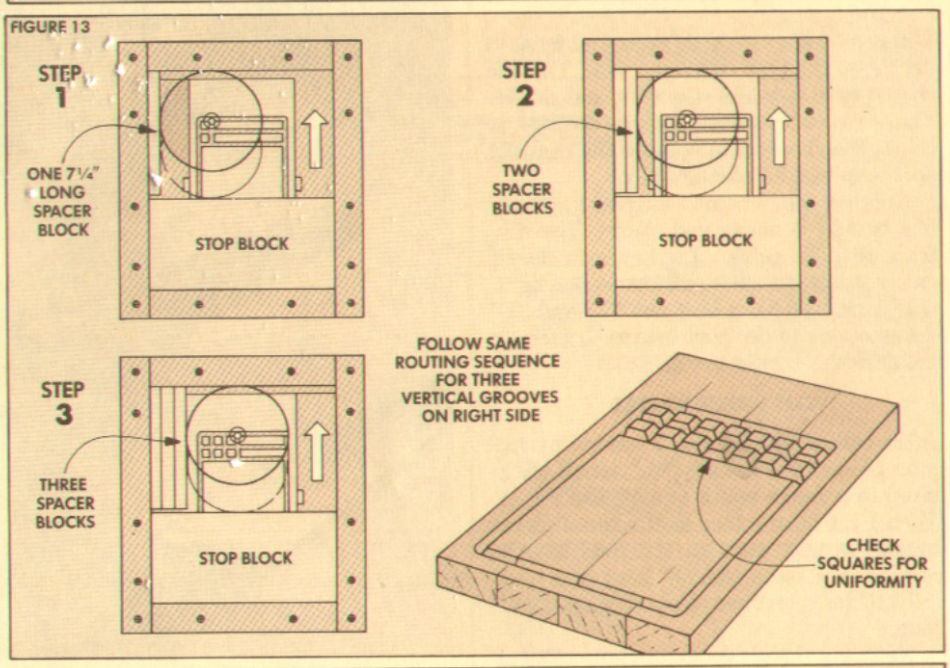

FIGURE 14

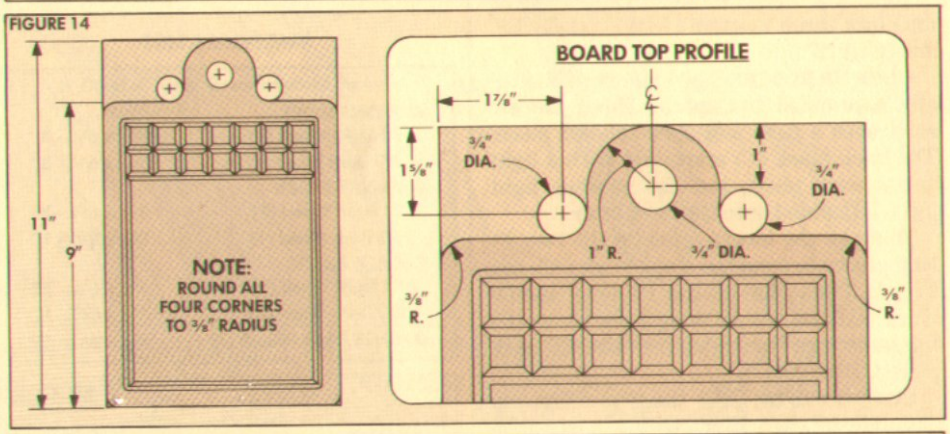

FIGURE 15

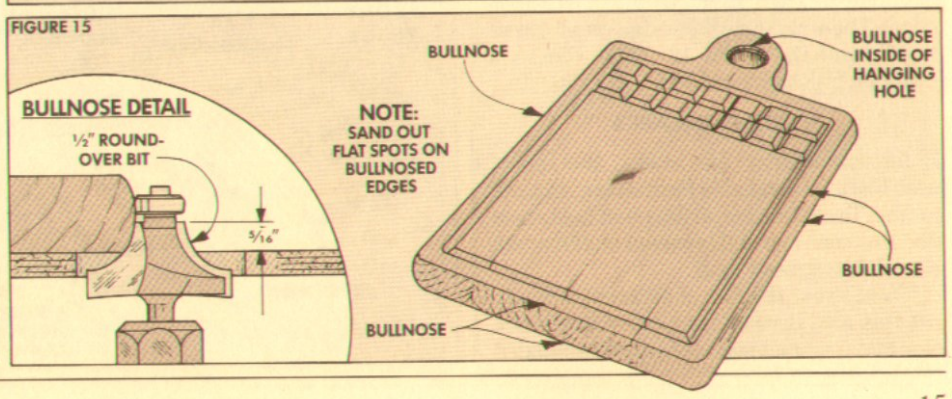

Knife Rack

CUSTOM-BUILT HOME FOR YOUR CUTLERY

Building a knife rack isn't difficult, but it does require a certain sequence of work. The trick is to make the cuts and then glue up the stock in the right sequence to get the slots where you want them. That's where this project gets interesting.

CHOICE OF WOODS

Before building the knife rack, you have to decide on the type of wood to use. The one shown here is made of walnut and maple. These two woods have a sharp contrast in color. (We chose them because the contrast shows up well for photography.)

Another combination (and one I actually like better) is maple and cherry. The contrast is more subtle. The key is to choose two woods with some contrast — one light, one dark. (We've added the "L" and "D" designations to the part letters to indicate the difference, refer to Fig. 1.)

CUT STOCK TO SIZE

After choosing the wood, I started by ripping pieces of 4/4 stock (13/16" actual thickness) to a rough width of 6¼", see Fig. 1. Then I cut off the four light-colored pieces (maple in this case) to the final lengths needed: one piece (AL) 8" long, one piece (BL) 10" long, and two pieces (CL and D) 12" long.

Next, cut three dark-colored pieces (walnut) into three lengths: (AD) 8", (BD) 10", and (CD) 12".

GLUE UP BLOCKS. The knife rack is actually assembled by making three blocks, each with a light and dark-colored piece. The back block (C) starts out with a light and a dark piece, but has another light piece (D) added onto the back later.

To make the blocks, glue up the two 8"-long pieces to form the front block (A), see Fig. 1. Then glue up the 10"-long middle block (B) and the 12"-long back block (C) the same way. Don't glue the third 12" back piece (D) on yet.

CUT TO WIDTH. Once the glue dries, rip one side of each block to get a straight edge. Then rip the other edge on all three blocks and the extra 12" piece (D) to a common finished width of 6", see Fig. 1.

CUTTING THE ARCS

Before assembling the blocks, the top of each block is rounded to form an arc with a 6" radius. To cut this arc, drill a pivot hole about 6¼" from one end and centered on the width of each block, see Fig. 2.

There are a number of different ways to cut this arc. It could be done with a sabre saw and trammel point, or just free-handed

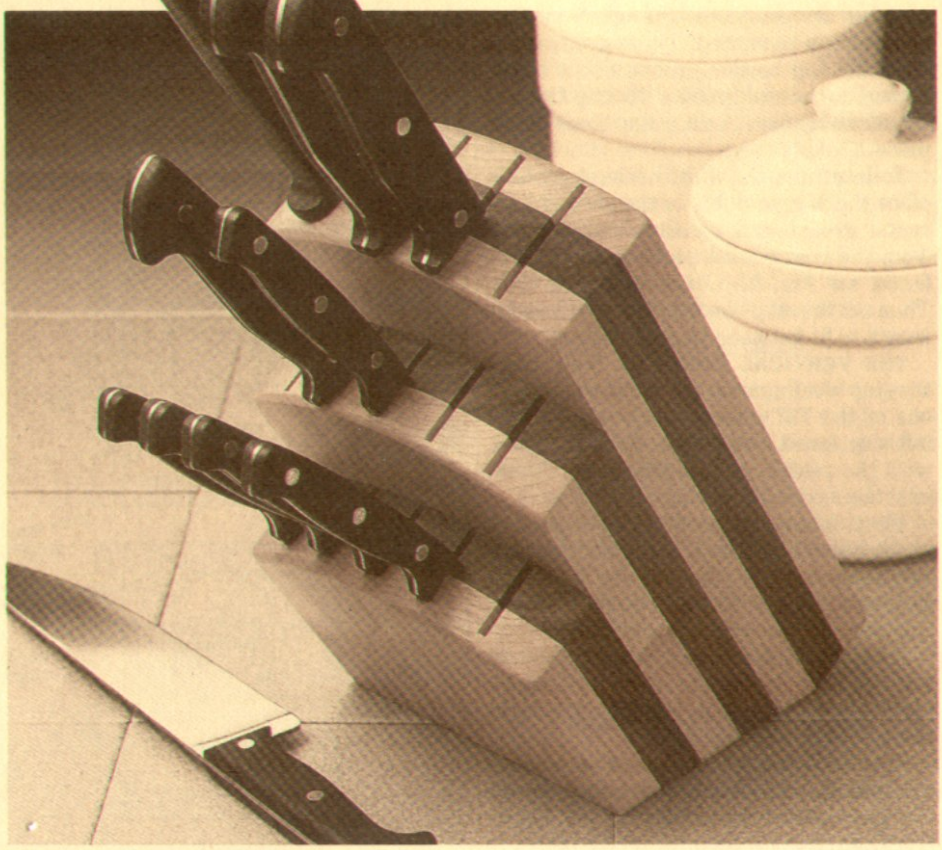

MATERIALS LIST

Overall Dimensions: 8" d x 6" w x 10" h	
A FRONT BLOCK	
AL Light Wood (1)	13/16 x 6¼ - 8
AD Dark Wood (1)	13/16 x 6¼ - 8
B MIDDLE BLOCK	
BL Light Wood (1)	13/16 x 6¼ - 10
BD Dark Wood (1)	13/16 x 6¼ - 10
C BACK BLOCK	
CL Light Wood (1)	13/16 x 6¼ - 12
CD Dark Wood (1)	13/16 x 6¼ - 12
D BACK (Light Wood) (1)	13/16 x 6¼ - 12

CUTTING DIAGRAM

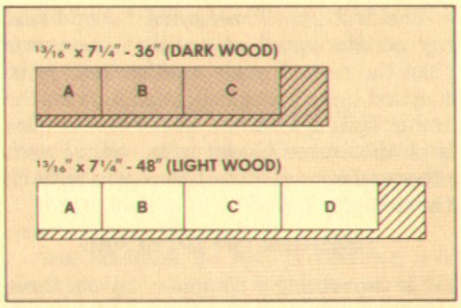

FIGURE 1

BLOCK PREPARATION

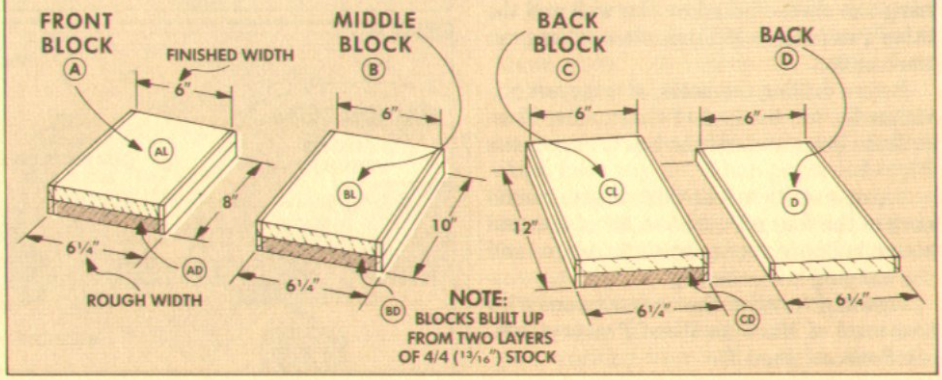

with a sabre saw. But I decided to make the cut on a band saw.

To make the cut on a band saw, first make a simple circle cutting jig from a piece of plywood and a pivot nail, see Fig. 3. Then clamp the jig to the band saw table. (For plans on making an adjustable circle cutting jig, see *Woodsmith* No. 51).

To cut the arc, align the pivot nail with the front of the blade and 6" away from the side of the blade, see Fig. 3. Then mount the hole in the block onto the nail and just pivot the block to cut the arc.

After the arcs were cut, I sanded out the band saw marks with a belt sander.

ROUND OVER ONE EDGE

To soften the hard edges, I decided to round over the *outside* edge of the curved surface of each block, see Fig. 4. (Note: It's best to round over this edge before cutting the knife slits. This way the pilot on the router bit will have a smooth surface to follow — and won't bump at each slit.)

Only the light wood is rounded, so rout with the dark wood facing up, see Detail in Fig. 4. Round over only the curved edge of each block (A, B, and C) and the curved edge of the extra piece (D). (Most of the other outside edges are rounded over after the three blocks are glued together.)

CUT TO LENGTH

After the curved edge of each piece is rounded over, cut the blocks (but not piece D) to length. This is actually a two-step operation. First, cut the blocks off square. Then trim a bevel off the ends so the completed knife rack will stand at an angle.

CUT OFF SQUARE. To determine the square cut line, measure down from the "shoulder" — where the arc meets the edge of the block, see Fig. 5.

To hold each block securely when making these cuts, I added an auxiliary fence to the miter gauge and then clamped the block to the fence, see Fig. 6.

CUT THE BEVELS. After the blocks are cut to length, tilt the saw blade to cut a 25° bevel. The bevel is cut so that the rounded-over edge is opposite the long point of the bevel.

To do this on my Sears saw, I had to place the miter gauge in the left slot and face the dark wood down, see Fig. 6. This procedure will vary if the blade tilts the other direction (as on Delta/Rockwell saws) or if you use the right miter slot.

When cutting the bevels on the front (A) and middle (B) blocks, line up the saw blade so the long point of the bevel ends right at the end of the block, see Detail in Fig. 6.

CUTTING THE BACK BLOCK. The bevel on the back block (C) is a little smaller (really it's a chamfer). Line up the blade so the cut goes along the joint line of the light and dark woods, see Fig. 7.

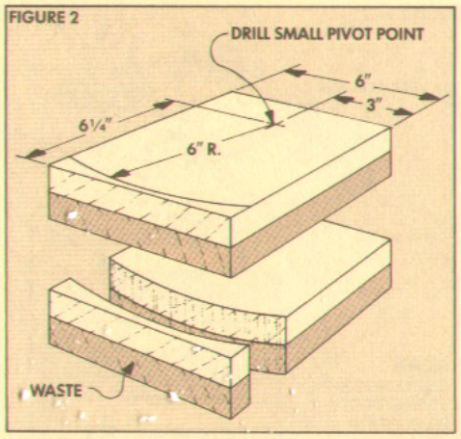

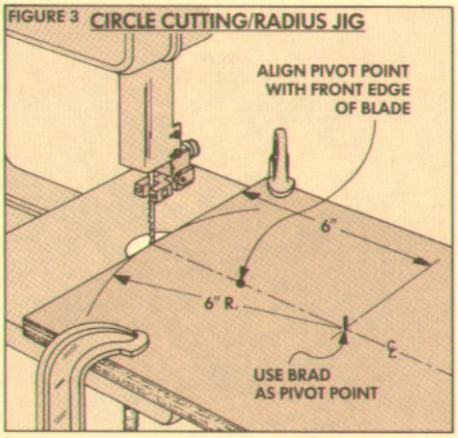

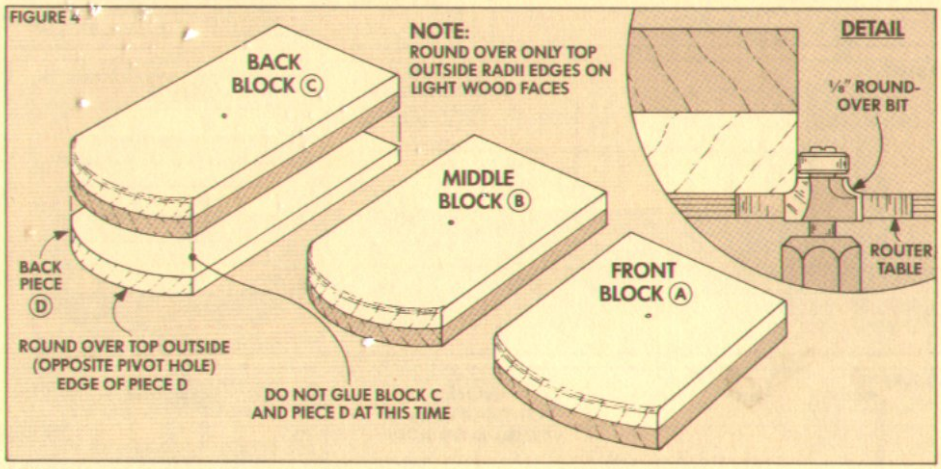

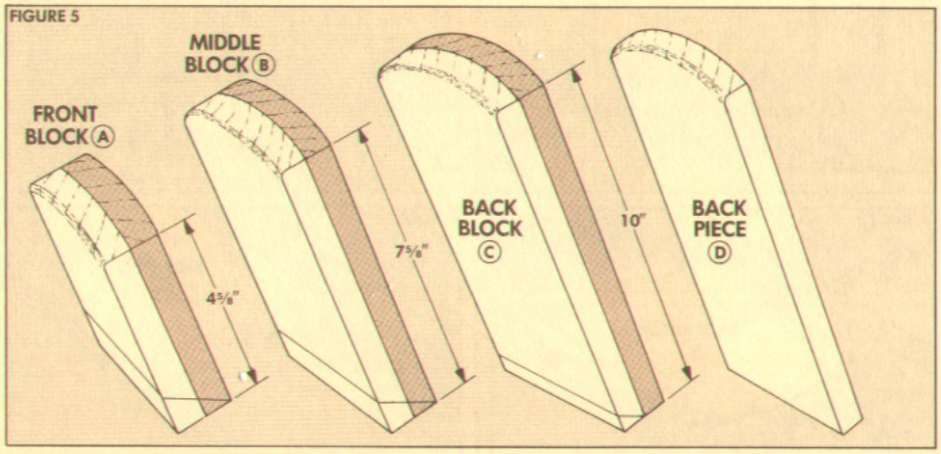

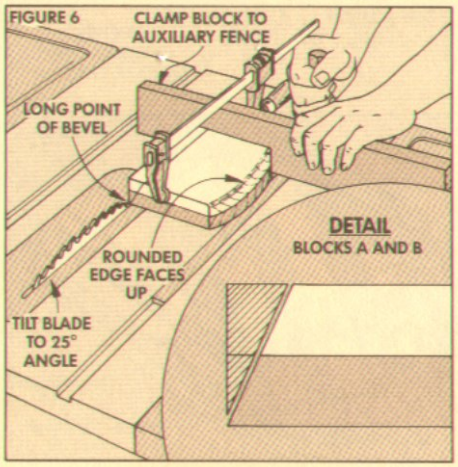

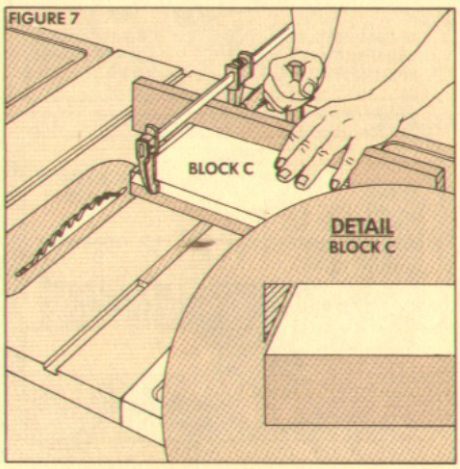

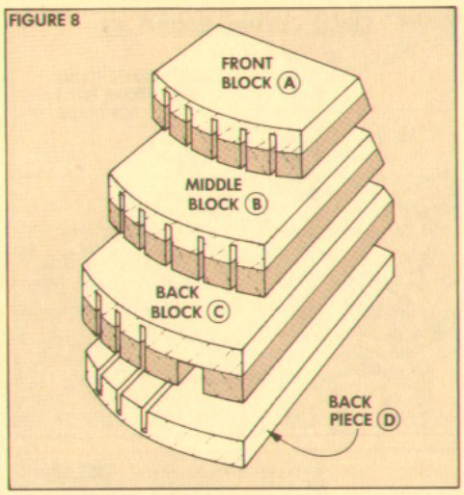

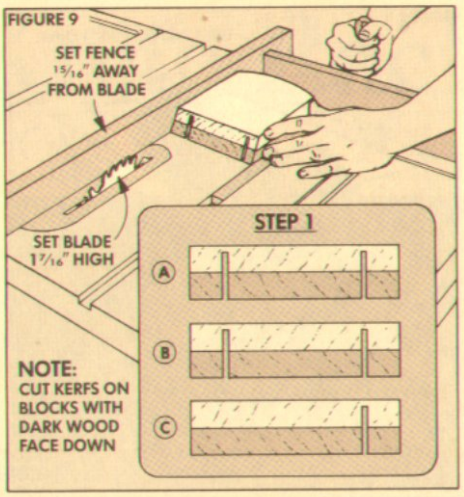

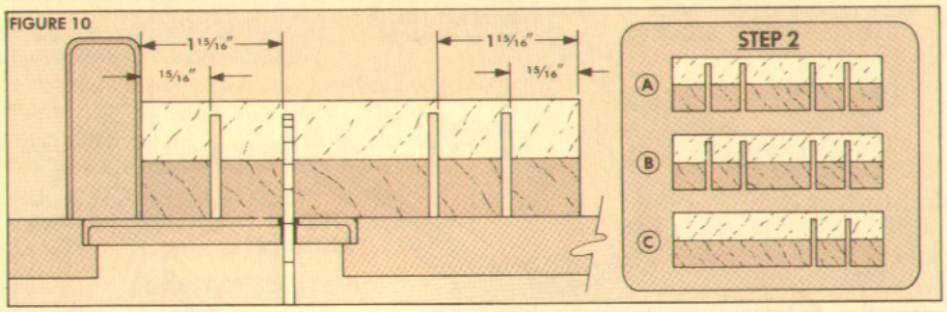

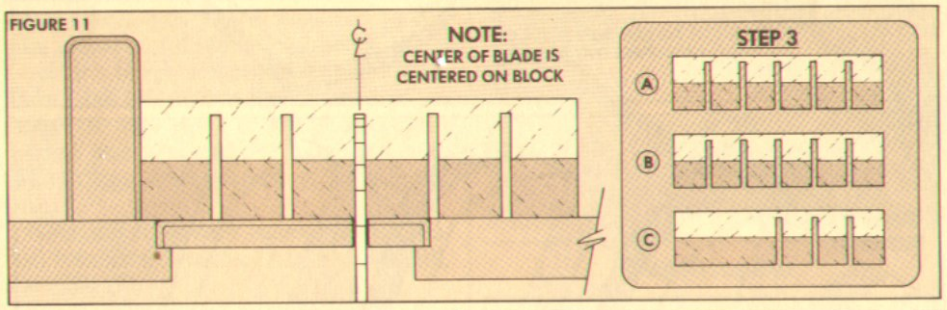

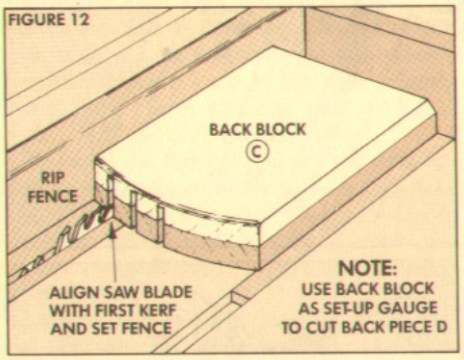

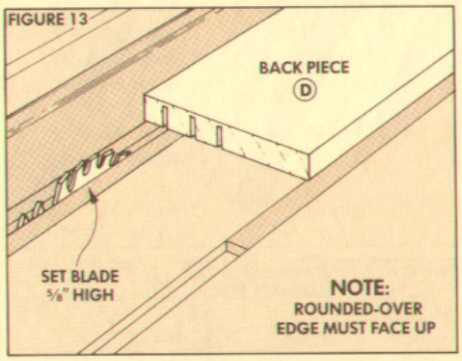

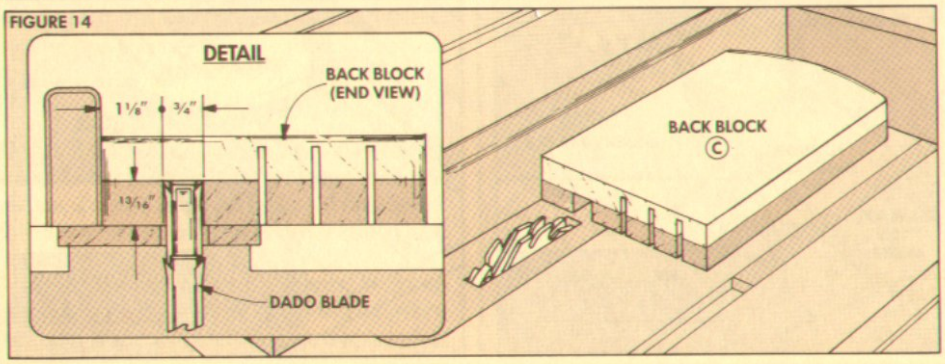

CUTTING KERFS

After the bevels are cut on the bottom of the blocks, I cut the kerfs for the knife slits. The challenge here is to make sure the kerfs are on the correct side of each block and uniformly spaced, see Fig. 8.

You can custom-cut the number of kerfs to fit your knife set, but I made mine to fit just about any set. It has thirteen slits and a larger groove for a sharpening rod.

SETTING UP THE SAW. To make the slits, I made a single pass with a carbide-tipped saw blade to cut a kerf approximately 1/8" wide. Start by raising the blade to a height of 1 7/16" (3/16" less than the thickness of the block). Then set the fence 15/16" away from the blade, see Fig. 9.

Note: Since the front block (A) is wider than it is long, it's easier to cut when backed up with a miter gauge. (For more on using a miter gauge with a rip fence, see "Talking Shop," page 23.)

CUTTING THE KERFS. Now, with the rounded-over corner facing up, make a cut through the length of the front block (A) and the middle block (B). Then, without changing the fence, turn the blocks end-for-end and make a cut with the other edge against the fence, see Fig. 9. (This puts a kerf 15/16" from both edges, see Step 1.)

Since a groove is needed on one edge of the back block (C) for the sharpening rod, cut the knife slit along the other edge only. When cutting, the curved edge enters the saw blade first, see Fig. 12.

Note: Don't make any cuts in the back (D) yet. Later, the blade will be set lower to make the kerfs in the back piece.

MORE KERFS. Now use the same procedure to cut another set of kerfs with the fence 1 15/16" from the blade, see Fig. 10.

CENTER KERF. The final kerf is centered on the blocks. Set the saw so the center of the blade will cut directly through the center of the blocks, see Fig. 11.

KERFING THE BACK PIECE. Since the back (D) is only 13/16" thick, the blade must be lowered to 5/8" above the table before making any kerfs in it.

The kerfs in the back (D) must align exactly with those in the back block (C), so I used the back block as a set-up gauge, see Fig. 12. Put the saw blade into the first kerf in the back block, then bring the rip fence over tight against the side of the block and lock down the fence.

Next, cut the kerf in the back piece (D), with the curved end against the miter gauge and the rounded edge up, see Fig. 13. Follow this procedure to cut the other two kerfs.

SHARPENING ROD GROOVE. Once all the kerfs are cut, switch to a 3/4" dado blade and cut a groove for the sharpening rod in the back block (C). To do this, set the dado blade 13/16" high (to the joint line) and set the fence 1 1/8" from the blade, see Fig. 14.

GLUING UP THE BLOCKS

After the sharpening rod groove is cut in the back block, the blocks can be glued up. I started by gluing the back (D) to the back of the back block (C).

Shop Note: Be conservative when gluing up these pieces. Spread a thin layer of glue centered between the kerfs. If there's too much glue, it will ooze into the kerfs once the pieces are clamped together.

Once the glue is spread on the back (D) and the back block (C), match the pieces as closely as possible so the curved tops are flush. Then, to line up the kerfs, push temporary ⅛" splines into the matching kerfs on both ends, see Fig. 15. When everything matches, clamp it tight.

CUT TO LENGTH. After the glue dries, trim the excess off the bottom of the back piece (D) square so it aligns with the flat bottom of the back block (C), see Fig. 16.

GLUE UP BLOCKS. Now all three blocks can be glued together. I started by gluing the middle block (B) to the back block (C). (Make sure the kerfs in the middle block face toward the back block.) After this assembly dries, add the front block (A).

The trick in both these glue-ups is keeping all the edges flush when they're being clamped. To do this, I started by working in the bottom corner. Don't try to match all the edges. Just feel a couple inches along the two edges that come together at that corner and make sure they feel flush to the touch. Once they're flush, clamp that corner, see Step 1 in Fig. 17.

Next, work the corner diagonally across from it until the edges at that corner are flush and clamp that corner, see Step 2 in Fig. 17. Then clamp the other two corners.

FINAL STEPS

Even though I tried to keep all the edges aligned, there's always a little sanding to make the surfaces flush. To smooth off the bottom and sides, I belt sanded the assembled block, see Figs. 18 and 19.

ROUND OVER EDGES. Once all the sides are sanded flush, round over the outside edges with a ⅛" round-over bit, see Fig. 20. Round over all the back and bottom edges of the knife rack but only the front edges of the front block (A). (Leave the other front edges square.)

FEET. To keep the knife rack from slipping on the countertop, I added small non-skid feet, see Fig. 21.

CLEAN OUT SLITS. Before finishing, it helps the appearance to clean out any saw marks or splinters from the top inch or so of each knife slit. The easiest way to do this is with an emery board, see Fig. 22.

The final step is to finish the entire rack (I used two coats of tung oil). Then fill it with knives, set it out on the countertop, and see how long it is before someone asks, "How did you cut those slits?"

FIGURE 15

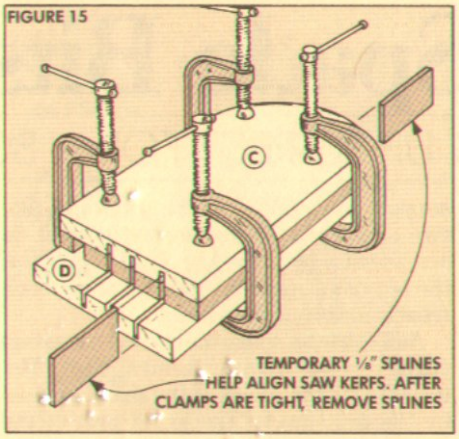

FIGURE 16

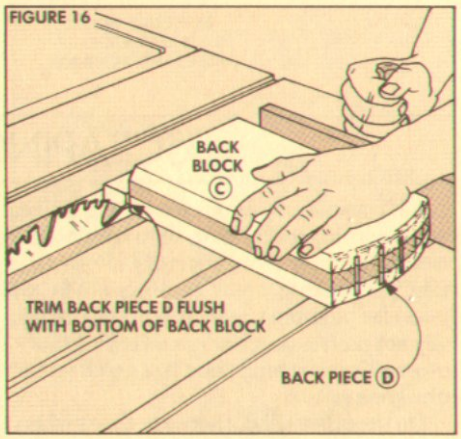

FIGURE 17

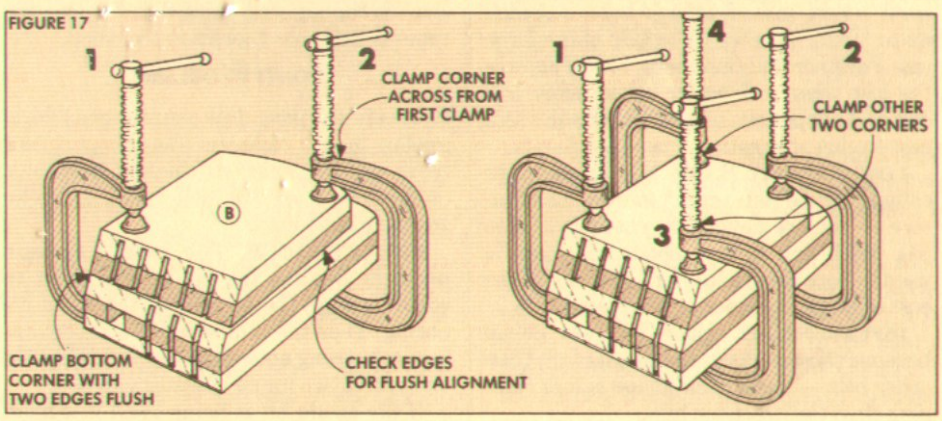

FIGURE 18

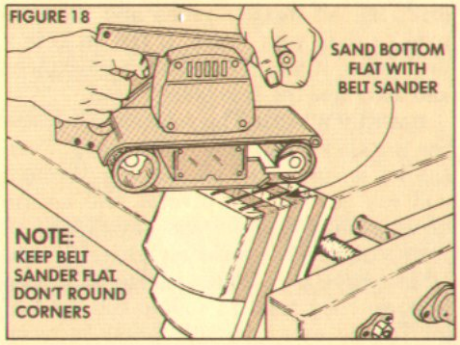

FIGURE 19

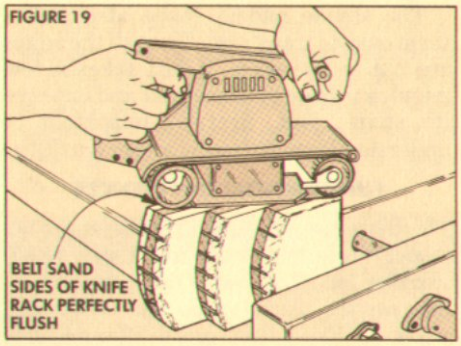

FIGURE 20

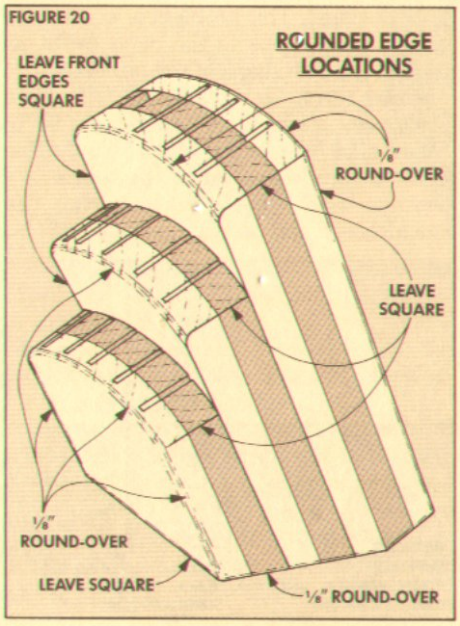

FIGURE 21

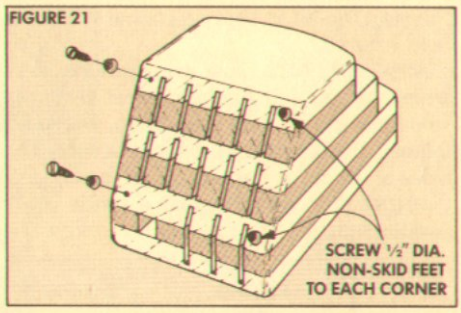

FIGURE 22

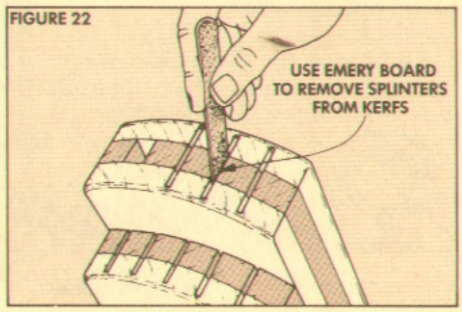

Spade Bits

SCRAPING UP RESPECT FOR A BORING BIT

I don't usually think of spade bits as real woodworking tools. Sure, they bore holes in wood. But they're used mostly in construction for making holes through studs and joists for plumbing and wiring. They're usually not used as precision wood boring bits — especially when brad point bits and Forstner bits are available.

On the other hand, there are times when I need to bore just a few large holes and can't quite justify the cost ($8 to $25) of the large size Forstner and brad point bits. This was the case when making the kaleidoscope and salt and pepper shakers for this issue. As a cost-saving alternative, I used spade bits.

LOW COST BIT. Spade bits (sometimes called "paddle" bits) aren't merely inexpensive — they're downright cheap ($1.50 to $4). With fine tuning, spade bits can be used to bore clean holes for a fraction of the cost of large Forstner or brad point bits.

DIFFERENT BIT. Spade bits are cheap because they're easier to manufacture than other bits — their basic shape is less complex than the precision bits.

The simple paddle shape also makes them easy to transform. Since all the edges are out in the open, it just takes a few minutes to tune up a spade bit and improve it's shape. But, first it's important to understand how its boring action is unique.

FUNDAMENTAL DIFFERENCES

There are two fundamental differences between spade bits and conventional woodworking bits. The first is that conventional bits *cut* the wood; spade bits *scrape* the wood, see Fig. 1. The second difference is in the way the bit is kept on course while the hole is bored.

SIDE SUPPORT. Most conventional bits work like revolving chisels to *cut* away the wood to form a round hole. Then, as the bit follows, the hole is kept straight because the sides of the bit fit the sides of the hole.

POINT SUPPORT. Because a spade bit is paddle-shaped, the sides of the hole can't support and guide it. Instead it works like two scrapers rotating around a shaft to *scrape* out a hole, see Fig. 1. This is one of the reasons a spade bit usually has so much trouble making a clean hole.

As a spade bit spins, the cutting (scraping) edges revolve around a central shaft. The upper part of this shaft is the shank gripped by the drill chuck. The lower part of the shaft is the tapered point that fits into the cone-shaped hole it forms in the wood.

POINT PROBLEMS

Normally, the point does a pretty good job of guiding the bit while providing support. But there are two situations where it falls down on the job — and the hole turns out to be anything but round.

BREAKTHOUGH. The most common problem is when the bit is just about to come through the far side of the wood it's boring. Then the thin web of wood remaining isn't strong enough to support the point and one of two minor disasters occurs.

If the spade bit is being used in a hand drill, the bit usually grabs and the drill tries to snap your wrist. If the bit is in a drill press, it usually grabs the workpiece and and ruins the hole being bored.

BACKUP BOARD. The solution is to back the workpiece with a ¾"-thick scrap. Then the bit is supported all the way through and can perform its pivotal role as the blades spin around the axis, see Fig. 2.

END GRAIN. When boring into end grain, all bits have a problem staying on course because they tend to follow the path of least resistance (the soft wood between growth rings). This problem is worse with spade bits because as the point drifts off course, the thin shank of the bit flexes.

PILOT HOLE. To reduce this drift when boring end grain, I use a brad point bit to bore a pilot hole for the bit to follow. (This is the principle applied to the temporary centers used when counterboring the kaleidoscope end pieces, see page 22.) So the spade bit will still get pivotal support, the diameter of the pilot hole should be equal to the width halfway up the point.

SHARPEN THE SCRAPERS

As the bit spins, the scraping edges have to go across the grain as well as parallel to it. This tends to tear and pull the wood fibers rather than shearing them off. So it's essential to get the edges sharp enough to scrape the bottom of the hole as cleanly as possible. Sharpening these edges is different from sharpening the edges on other bits.

OTHER BITS. Brad point bits and Forstner bits actually perform two cutting actions at the same time. First, the outer diameter of the hole is scored (by the spurs on a brad point bit or by the rim on a Forstner bit). Then the wood is chiseled away within this scored circle by the cutting edges on the end of the bit.

SPADE BITS. A spade bit uses a different principle. As it scrapes its way down into the wood, the width of the bit is the only thing that defines the circumference of the hole. It simply scrapes the wood in its path.

DOUBLE TROUBLE. This scraping action causes two problems. First, because boring is done without a scored border, the edges of the hole end up ragged and torn. Second, because the bit is trying to scrape a flat surface while revolving in circles, it tends to skitter and squirm.

FRICTION. In addition to these problems, a spade bit creates an enormous amount of friction. This friction heats up the edges (which softens them), and dulls the scraping edges faster than the cutting edges dull on other bits. Then all the previous problems are made worse.

SPEED. There's no way to eliminate friction. But it can be lessened by running a spade bit as slowly as possible. There's a warning on the package not to use them over 2,500 rpm. But that's for your safety. It's in the bit's best interest to keep the speed below 500 rpm.

FIGURE 1

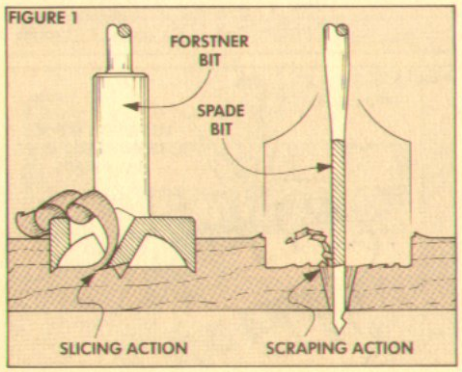

FIGURE 2

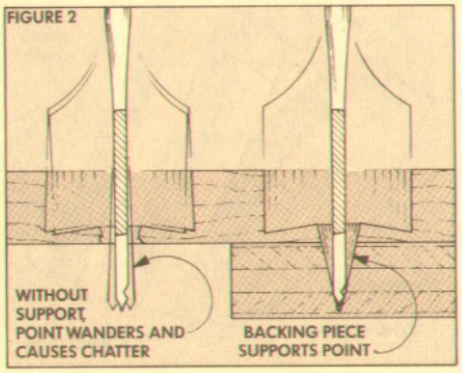

FIGURE 3

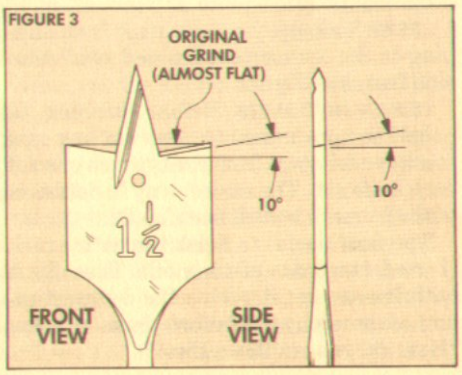

CHANGE THE PROFILE

If you concentrate on running the bit slowly, the other problems can be dealt with using a file to change the profile of the cutting edges. The idea is to make the outer corners score the wood to define the circumference of the hole.

Note: I use a "smooth cut" mill file for this operation. (The mill file gets its name because it was developed for sharpening saw blades in saw *mills*.) For more information on files, see *Woodsmith* Nos. 39 & 43.

FILE PROFILE. When using a mill file to sharpen the scraping edges, two profiles are formed at once. The primary angle is a 10° relief angle that forms a sharp scraping edge, see Fig. 3.

The secondary profile is a 10° slope from the outer corners of the scraping edges to the base of the point. This profile permits the corners of the bit to enter the wood first, scoring the circumference of the hole the same way the spurs or rim do on brad point and Forstner bits.

BONUS EFFECT. There seems to be a bonus effect from this profile. As the wood is scraped away, a cone is formed in the bottom of the hole. This cone helps to hold the bit on its central axis, rather than letting it squirm as it does when the edges are dull and square, see Fig. 2.

FILING THE EDGES

Filing these two 10° angles at the same time is easier than it sounds. The trick is to form a compound angle on the edge of the blades in one step with a 10" mill file. To control these angles and guide the file, I made a support block, see Fig. 4.

FIGURE 4

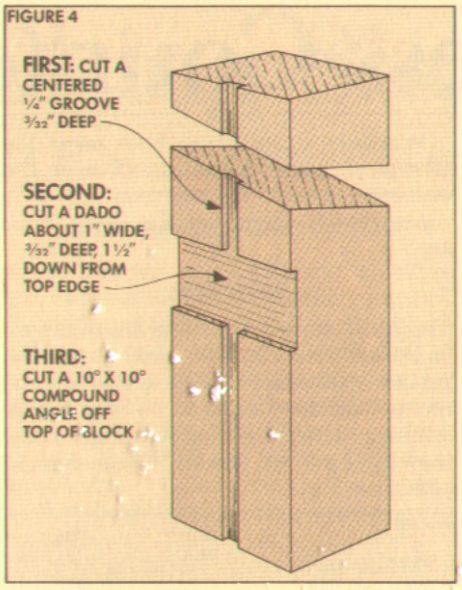

SUPPORT BLOCK. The support block is made out of a scrap of hardwood (I used maple) about 10" long. Begin by ploughing a ¼"-wide groove in one face for the bit shank. Then, to provide clearance for the shaft (which is thicker than the "paddle"), make a shallow dado across the front of the support block.

COMPOUND ANGLE. Next, make a 10° compound cut on one end of the block by tilting the blade to 10° and turning the miter gauge to 10° (or 80°, depending on the miter gauge). As the cut is made, the high corner should be on the top left of the grooved side of the jig, see Fig. 4.

Then to file the edge, clamp the bit against the face of the block in the vise so the outside point of the left edge is barely above the edge of jig. Next, clamp a small stop block against the end of the shank for a depth stop. Then use a second clamp to hold the blade against the block.

FIGURE 5

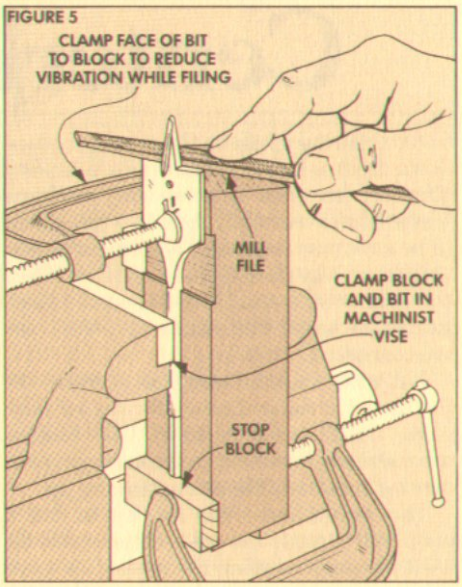

FILING SEQUENCE. The top of the block is used to guide the file. Stroking across the clock over the bit's edge will form a 10° angle from the outside point to the base of the center cutting point. At the same time, the cutting angle (relief angle) of the blade will be set. Keep filing until the last few strokes of the file bring the blade edge and the top of the jig into one continuous plane.

After filing one edge, turn the blade around and rest the end of the shank against the stop block and repeat the process on the opposite edge. (The points should line up with one another.)

NEW SPADE BITS

There's a new type of spade bit on the market that addresses most of the problems normally associated with spade bits (see article above). The Irwin 2000 series spade bits have two distinct features that set them apart from conventional spade bits.

First, these bits have spurs on the outer corners of the blades. These spurs score the perimeter of a hole (like the spurs on a brad point bit) before the center is scraped away, resulting in much cleaner holes.

The second improvement is a change in the edge itself. It's undercut on the front edge (as well as on the side edges of the point), which gives the bit a sort of a hybrid cutting/scraping action instead of the pure scraping action of conventional spade bits.

These bits are forged in one piece from high grade tool steel and heat treated for extra strength. The manufacturer claims these bits cut faster and last three times longer than conventional spade bits. Rather than just accepting these claims, we bought a set for the *Woodsmith* shop.

OUR EXPERIENCE

After giving these bits a workout in the *Woodsmith* shop, we came to two conclusions. First, we found that right out of the box these new bits do cut faster than conventional spade bits (also right out of the box). Since we haven't been able to dull them yet, they seem like they'll hold an edge for quite a while.

Our second finding was that right out of the box, the new bits don't cut as cleanly as conventional bits after the five minute tune-up as described above. (In fact, the quality of the cut was about the same as with conventional bits.)

However — and this is a big however — after taking a little time to file the cutting edges and hone the spurs, these bits cut much better than any spade bit I've ever used. What's most important, though, is they cut a very clean hole. The spurs deserve the credit for this.

When tuning these bits, I sharpened the cutting edge at the factory angle, which is perpendicular to the shank. (There's no need to angle it toward the base of the point because the spurs do the scoring.)

While these bits still are not the precision woodworking tools that brad points and Forstner bits are, they do deserve their place in the shop. I've always kept a collection of spade bits around, anyway. Now that these spurred spade bits are available, I can't imagine purchasing the old-fashioned kind.

Irwin Speedbor 2000 series bits are available individually or in a six-piece set at most hardware stores and home centers. A special 13-piece set (¼" to 1" in 1/16" increments) is available from Woodcraft Supply Corp., 41 Atlantic Ave., Dept. WS52, Box 4000, Woburn, MA 01888; (800) 225-1153. *13-Piece Spade Bit Set*, Order. No. 02L61, $34.50 ppd.

Centerless Counterboring

Counterboring a hole so the diameter steps down from a larger diameter to a smaller diameter (as when counterboring to plug a screw hole) is normally done in what seems to be a reverse sequence. The larger hole is bored part way through the wood first. Then the smaller bit is started on the center mark left by the larger bit to make sure the holes are concentric.

But when counterboring the recesses for the lenses in the end pieces for the kaleidoscope there was a problem. The centers were already bored out to accommodate the turning centers of the router turning jig.

This meant there was no way to drill a pilot hole to guide the point of the spade bit used for counterboring the recess. To solve this problem, I used a drill press jig with temporary centering dowels for the bit.

TEMPORARY CENTER

The temporary center is a short length of dowel with a pilot hole bored through the center. The reason for the pilot hole is the spade bit point wanders badly when starting to bore into the end grain. A brad point bit wanders less, so it's used to get the spade bit off on a straight course.

PILOT HOLE JIG. The pilot hole has to be perfectly centered in the dowel. To locate the centerpoint for the pilot hole I made a jig that also holds the dowel when drilling.

The first step is to use a square to scribe two perpendicular lines near the end of a scrap of wood, see Step 1, Fig. 1. Next bore a ½" hole at the intersection of these lines. Then, to make the jig act as a clamp, saw a kerf to the hole from one end, see Step 2.

MARK CENTER. To use the jig to mark the center on the dowel, insert the dowel in the hole so its end is flush with the surface. Next, use the square to continue the line scribed on the jig across the end of the dowel. Then twist the dowel about 90° and draw another line across the end of the dowel. The intersection of the two lines is the center of the dowel, see Fig. 2

BORE CENTER. To bore the center, first push the dowel up so its lower end is flush with the bottom of the jig. (This is so it will rest flat on the drill press table.) Then use a small clamp to grip the dowel in the jig, see Fig. 3. Then bore though the center.

Note: Although I needed three temporary centers for the kaleidoscope, I made extras and threw away the ones with bad holes.

BASE BOARD. The dowel is used to counterbore the kaleidoscope's lens cap. To do this, clamp a baseboard to the drill press table, bore a ½" hole ⅝" deep and push the centering dowel into the hole, see Fig. 4.

POSITION WORKPIECE. Now press the workpiece to be counterbored over the centering dowel. As the lens recess is counterbored, the dowel also is cut away, see Fig. 5.

FIRM GRIP

There was one problem using this technique on the end pieces for the kaleidoscope. The friction of the spade bit as it scraped out the recess spins the workpiece. To keep it from spinning (without getting my fingers near the bit), I gripped it with "Channel-Lock" pliers, see Fig. 6.

Note: To prevent the jaws of the pliers from marring the end piece I put two layers of masking tape over the jaws on each side.

BORING SEQUENCE. When boring two different sized holes (like the recess for the lens and the lens opening on the lens end piece) the smaller lens opening should be bored first, see Step 1, Fig. 7.

Then, when the larger recess to hold the lens is bored from the opposite side, the edges of the blade are still supported and don't rattle around (which ruins the workpiece) when the two holes meet in the center, see Step 2.

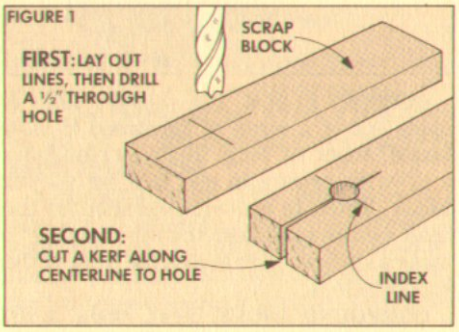

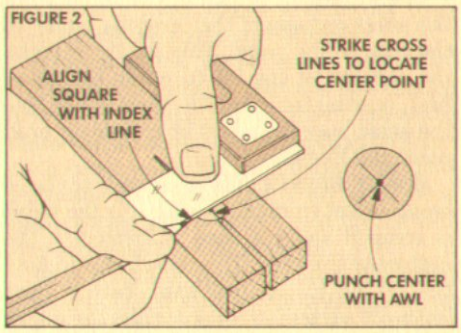

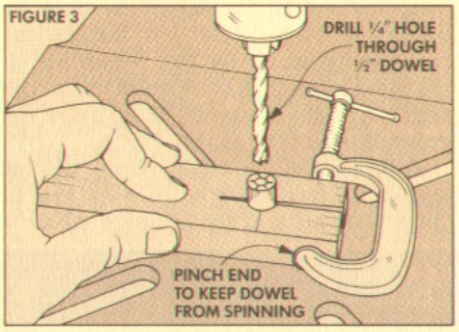

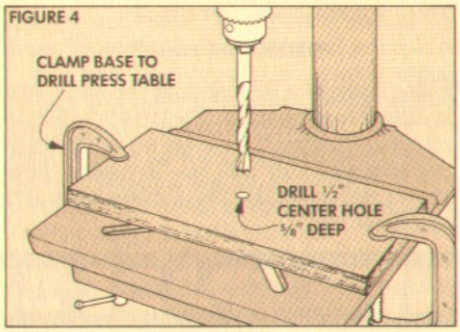

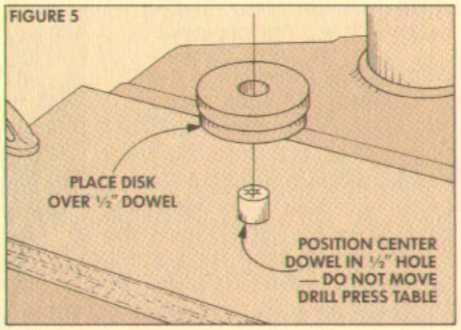

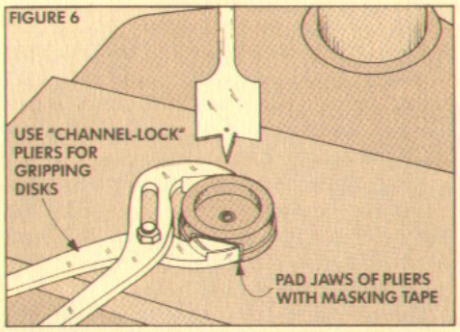

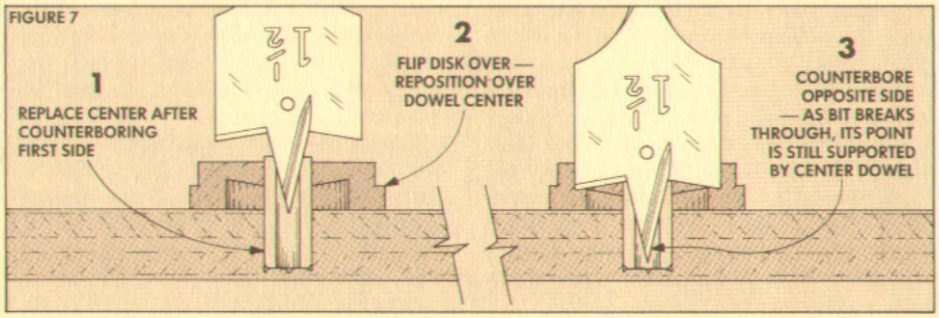

Talking Shop

AN OPEN FORUM FOR COMMENTS AND QUESTIONS

CAST IRON PULLEYS

In the article on band saw basics that appeared in *Woodsmith* No. 51, we mentioned that we reduced the vibration of our Sears band saw by replacing the light metal pulleys that came on the saw with heavy turned cast iron pulleys. We received a number of letters asking where we purchased the cast iron pulleys.

First of all, I think there was some confusion about which pulleys we replaced. We didn't replace the large band saw wheels that support the blade. I don't know of any source for those other than buying the replacement part from Sears.

The V-belt pulleys we replaced were on the motor arbor and the wheel shaft that drive the saw. They are available or can be ordered through most hardware stores. We found ours at a local bearing supply house, but they are also available at electric motor distributors and repair service companies. Look in the Yellow Pages under "Bearings" or "Electric Motors." Take your pulleys with you to get a perfect match.

AN UNTRACKED BLADE

One of the most interesting phone calls that we received after the band saw article appeared was from a reader who was having trouble keeping his ⅛" blade on the wheels. He had aligned the wheels, tensioned and tracked the blade, and aligned the thrust bearings and side guides — all the right steps. But every time he closed up the housing and turned the power on, the blade slowly crept off the front of the wheels.

This had me stumped until I spoke with Mark Duginske, a cabinetmaker who is currently writing a book about band saws. His guess was that nothing was wrong with the band saw or the way it was set up — the problem may be in the blade.

There is a weld on every band saw blade to form it into a circle. If one of the two ends that are welded together is cut at a slight angle before welding, the blade can be "warped." That is, if you were to lay the blade down on a flat surface, the back edge wouldn't touch at all points.

Once the blade is mounted on the saw and the power turned on, it has a tendency to slowly work its way off the front of the wheels. This is especially true of a highly-tensioned ⅛"-wide blade since it's difficult to make a straight weld in such narrow blade stock.

Mark's suggestions were twofold: Back off the tension a little bit, or try a different blade.

MITER GAUGE AND RIP FENCE?

Every time we show a table saw operation that requires the use of the miter gauge and the rip fence *at the same time* (such as Fig. 9 on page 18) we usually get a small stack of letters. Most of the readers explain that they have learned to "NEVER use the rip fence when crosscutting or the miter gauge when ripping. DO NOT use the rip fence as a length stop." (That quote came from a reader's Sears Craftsman table saw owner's manual.)

I agree with that quote. Okay, then why does *Woodsmith* show them used together?

CROSSCUTTING. The difference is in the word "crosscutting." If you are going to be cutting *all the way through* a board (crosscutting), you should never use both the miter gauge and the rip fence at the same time. The cut- off piece that's *between* the blade and the rip fence might kick back as the cut is completed, see Fig. 1. There's nothing to push it past the blade.

FIGURE 1

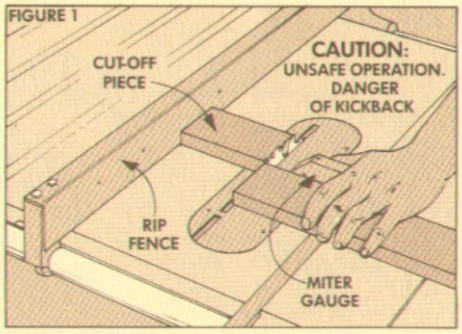

DADOING. If you are not cutting all the way through the thickness of the workpiece (such as when making a dado, or kerf), you can safely push the wood with a miter gauge and use the fence as a length stop, see Fig. 2. Since the workpiece is still one piece, there's nothing to get caught between the blade and fence and kick back.

FIGURE 2

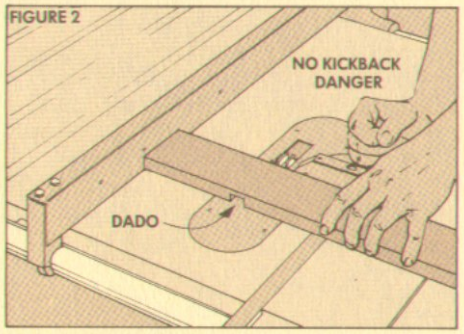

LENGTH STOP. What about if you are crosscutting? If you shouldn't use the rip fence, what's the best way to set up a length stop so you don't have to "eyeball" the cut on a pencil line?

The best method is to use a panel-cutting jig with a stop block (see *Woodsmith* No. 25). Or attach an auxiliary fence with a stop block to the miter gauge. (A flip-up stop block appeared on page 3 of *Woodsmith* No. 48.)

LONGER PIECES. When cutting a piece longer than about 4", I clamp the stop block to the left side (from the operator's viewpoint) of the auxiliary fence, see Fig. 3. The distance between the stop block and the blade is set for the desired length of the workpiece.

FIGURE 3

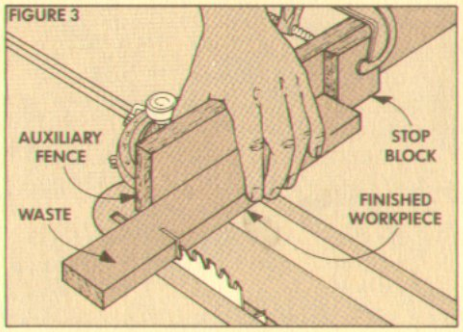

When the miter gauge is pushed beyond the saw blade the stop block is moving *with* the workpiece, and the workpiece won't bind.

SHORT PIECES. When the finished piece I need is shorter than about 4", I'm not comfortable holding the workpiece with my fingers between the stop block and the saw blade. In these situations, I lengthen the auxiliary fence to the right and clamp the stop block on the right (waste) side of the blade, see Fig. 4.

FIGURE 4

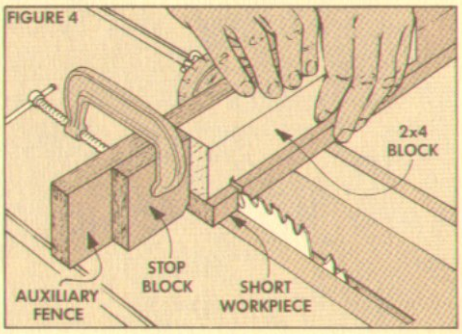

Now the short workpiece is actually the cut-off piece, but it won't kick back since it's carried past the blade by the auxiliary fence. To keep the workpiece from vibrating , I hold a 2x4 block down on top of it.

When the workpiece is beyond the blade, clear the cut-off piece by holding down the 2x4 and pulling it off to the left.

Sources

KALEIDOSCOPE

We're offering the parts for the kaleidoscope as a kit (see box below). If you plan to build a number of kaleidoscopes, it may be less expensive to buy the parts in quantity. Here's where we ordered the parts for our first kaleidoscope:

THE RENOVATOR'S SUPPLY, Millers Falls, MA 01349; 413-659-2211 (Catalog: $2.00). *Brass Railing (tubing)*, 2" diameter, 1/16" wall thickness, 1-foot length, Order No. 23310, $7.25 ppd.

EDMUND SCIENTIFIC, 101 E. Gloucester Pike, Barrington, NJ 08007; 800-222-0224 (Catalog: $2.00). *Double Convex Lens*, 36 mm dia., 50 mm focal length, Order No. H94, 257, $8.50 plus $2.95 shipping.

MIRROR. To cut the three mirror pieces for inside the kaleidoscope, we bought a package of 3/32"-thick mirror tiles at a local building supply store. A package of six 12" x 12" mirror tiles cost $5.95.

You might find some small scraps of mirror at a local glass shop or tile shop.

SEALANT. We mentioned in the article to use silicone sealant to attach the glass, lens, and brass rings in place. At the local hardware store we found a 3 fl. oz. squeeze tube of Dow Corning's clear "100% Silicone Rubber General Purpose Sealant" for $3.00. Since this sealant is used to repair aquariums, it's also available in pet shops.

SALT AND PEPPER SHAKERS

There are a couple of options on the stoppers for the salt and pepper shakers. The easiest is probably a cork. Corks can be salvaged from a wine bottle or bought at most hardware stores. We bought a #6 cork (which have a 3/4" top dia.) for 10¢.

You also could use a removable plastic plug. *Woodsmith* is offering these plugs in small quantities (see box, right). Corks and plugs can be bought in quantity from:

MEISEL HARDWARE SPECIALTIES, P. O. Box 258, Mound, MN 55364; 800-441-9870 (Note: $25 minimum order. Catalog: $1.00). *Plastic Plugs*, fits a 11/16" hole, Order No. 412. $4.00 per 100. *Cork Stoppers*, #8, approx. 7/8" top diameter, approx. 43/64" bottom diameter, Order No. CK8/20, $1.75 per 20 corks.

CHEESE BOARD

We applied two coats of Martens Wood Preservative (Butcher Block Oil) on the cheese board. This is a combination of oils and waxes that penetrates into the wood and hardens. Martens says that their "ingredients meet requirements of the FDA as a food additive but it's not intended for internal use." It's available from:

WOODCRAFT SUPPLY CORP., 41 Atlantic Ave., Dept. WS, Box 4000, Woburn, MA 01888; 800-225-1153 (Catalog: Free). *Martens Wood Preservative (Butcher Block Oil)*, Order No. 11S22, $5.95 ppd. per pint.

OTHER OPTIONS. Martens Wood Preservative penetrates into the wood. If you prefer a surface finish (like a varnish), you may want to use Behlen's Salad Bowl Finish. Its ingredients are also approved by the FDA and it's also available from Woodcraft (Order No. 08N65, pint, $6.75 ppd. or Order No. 08P15, $9.90 ppd.)

A less expensive option is simple mineral oil. It's safe (it's used as a laxative) and is available from drug and grocery stores. I've rubbed it into a number of cutting boards, but have found I need to periodically add more oil.

KNIFE RACK

We found the 1/2"-dia. non-skid feet for the bottom of the knife rack at the local hardware store. They were labelled "plastic bumpers" and cost 69¢ for a package of four. They also can be ordered from:

MEISEL HARDWARE SPECIALTIES (see address above). *Non-Skid Feet*, 1/2" dia. x 1/4" hgt., Order No. 421, $2.95 per 20.

CORRECTIONS

One of the problems of printing detailed artwork like we do in *Woodsmith*, is the potential for an error. In a recent issue there were 614 measurements in the artwork alone. We try to double and triple check every measurement, but sometimes there will be a mistake or a couple numbers get switched.

DO YOUR HOMEWORK. We feel the same way about plans that we do about hardware: make sure you have all the parts and the measurements are correct before you begin building. Whether it's our plans or anyone else's, check all the measurements before you make any cuts. Working through a project in your head makes the building go smoother — and if there are any mistakes, you are likely to catch them.

If you find a measurement for a project in *Woodsmith* that you think is wrong, let us know. We can check into it and get back to you. If it's our mistake we can share it with other readers, and maybe save someone a little frustration.

BACK ISSUES. As most of you know, we sell back issues of *Woodsmith*. What you may not know is that when we reprint these back issues (about once a year) we correct any mistakes that have been discovered. So if you order back issues, you are getting corrected copies.

CLASSIC ROADSTER. We did make a couple mistakes on the classic roadster in *Woodsmith* No. 51 and would like to set the record straight. On page 6 in Figure 14 (the Fender Profile), the measurement from the center of the front axle to the front of the fender should measure 1 3/8" (not 1"). The radius on the back of the fender should measure 1 3/16" (not 1 3/16".)

If you ordered the full-size pattern from *Woodsmith*, the measurement given for the back fender radius is also incorrect (it should be 1 3/16", not 1 3/16"), but the drawing itself is correct and can be used.

ROADSTER PATTERN. If you haven't ordered the pattern, it's still available and free. Ask for *Woodsmith* Pattern CAR51. Send your name and address to:

WOODSMITH PATTERN. Dept. CAR51, P.O. Box 10350, Des Moines, IA 50306.

PROJECT KITS

KALEIDOSCOPE KIT

Finding a source that would supply one lens and two small pieces of brass tubing without a minimum order, postage, and handling charges was impossible. So *Woodsmith* is offering a kit that will include just the lens and brass rings to build one kaleidoscope. (Note: There's no wood or mirrors included in the kit.)

The total price (we pay the postage) for this kit is $12.95.

To order the kit, just write your order on a piece of paper: Kaleidoscope Kit, one double convex lens (36 mm diameter) and two brass rings (2" outside diameter). Send it to us with your name and address, the number of kits you want, and your payment.

Send your order and payment (no charge cards or phone orders, please) to: *Woodsmith* Kaleidoscope Kit, P.O. Box 10350, Des Moines, IA 50306. Please allow 4 to 6 weeks for delivery.

(Note: For fastest service, please use the address with P.O. Box 10350, as listed above. Don't use the enclosed envelope.)

SALT/PEPPER SHAKER PLUGS

To order six plastic plugs (enough for two sets) for the salt and pepper shakers, send us a SASE (self-addressed stamped envelope — a business size envelope with a 22¢ stamp on it). Include $1.00 to cover the cost of the plugs and handling.

Send it to: *Woodsmith* Plastic Plugs, Box 10350, Des Moines, IA 50306.